THE INFORMATION CONTAINED HEREON IS THE PROPERTY OF ABLE COMPUTER TECHNOLOGY, INC. TRANSMITTAL, RECFIPT OR POSSESSION OF THE INFORMATION DOES NOT EXPRESS, LICENSE, OR IMPLY ANY RIGHTS TO USE, SELL, OR MANUFACTURE FROM THIS INFORMATION AND NO REPRODUCTION OR PUBLICATION OF IT, IN WHOLE OR IN PART, SHALL BE MADE WITHOUT WRITTEN AUTHORIZATION FROM AN OFFICER OF THE ABOVE FIRM.

REVISIONS			
LTR	DESCRIPTION	DATE	APPROVED
A	PROD. REL. PER E.O. 298	4-16-81	JJW

REF. ONLY

TOLERANCES UNLESS OTHERWISE SPECIFIED FRACTIONS DEC ANGLES ± ± ±		ABLE COMPUTER TECHNOLOGY	
APPROVALS	DATE	SCHEM-16 CH ASYNC DMA COM CNTRLR	
DRAWN R Wingel	25 Feb 81		
CHECKED [illegible]	4-16-81	SCALE	SIZE B
JJW	4-16-81		DRAWING NO. 10103003
		DO NOT SCALE DRAWING	SHEET 1 OF 40

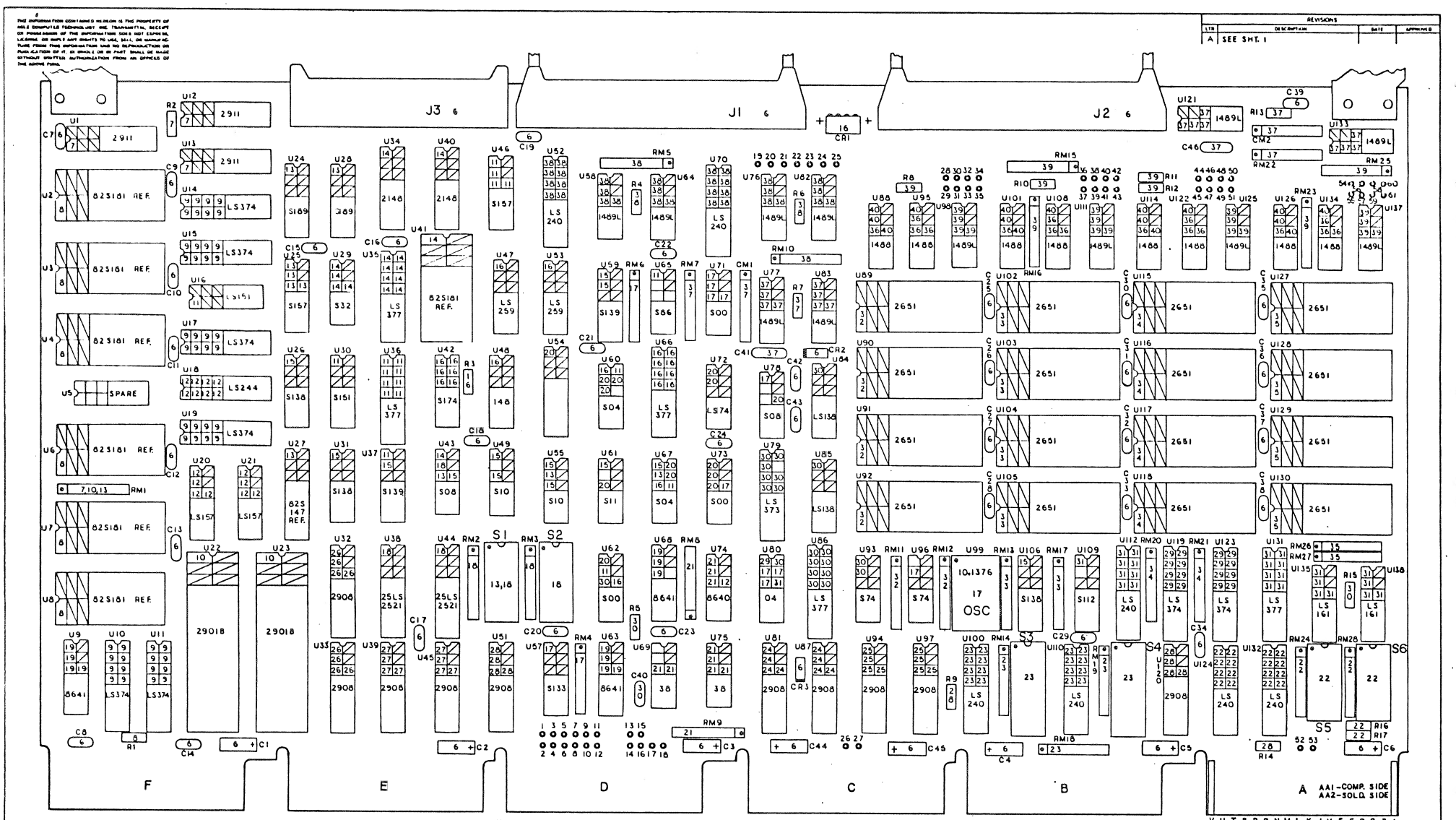

REVISIONS			
LTR	DESCRIPTION	DATE	APPROVED
A	SEE SHT. 1		

REFERENCE DESIGNATION CHART		
TYPE	LAST USED	NOT USED
IC	U138	U5,50,56,107,113,134,139
RES. MOD.	RM28	
CAP. MOD.	CM2	
DIODE	CR3	
CAPACITOR	C46	
RESISTOR	R17	

ACT ABLE COMPUTER TECHNOLOGY

SCHEM-16 CH ASYNC. DMA COM CNTRLR

SIZE D | DRAWING NO 10103003

THE INFORMATION CONTAINED HEREON IS THE PROPERTY OF ABLE COMPUTER TECHNOLOGY INC. TRANSMITTAL, RECEIPT OR POSSESSION OF THE INFORMATION DOES NOT EXPRESS, LICENSE, OR IMPLY ANY RIGHTS TO USE, SELL, OR MANUFACTURE FROM THIS INFORMATION AND NO REPRODUCTION OR PUBLICATION OF IT IN WHOLE OR IN PART SHALL BE MADE WITHOUT WRITTEN AUTHORIZATION FROM AN OFFICER OF THE ABOVE FIRM.

REVISIONS			
LTR	DESCRIPTION	DATE	APPROVED
A	SEE SHT. 1		

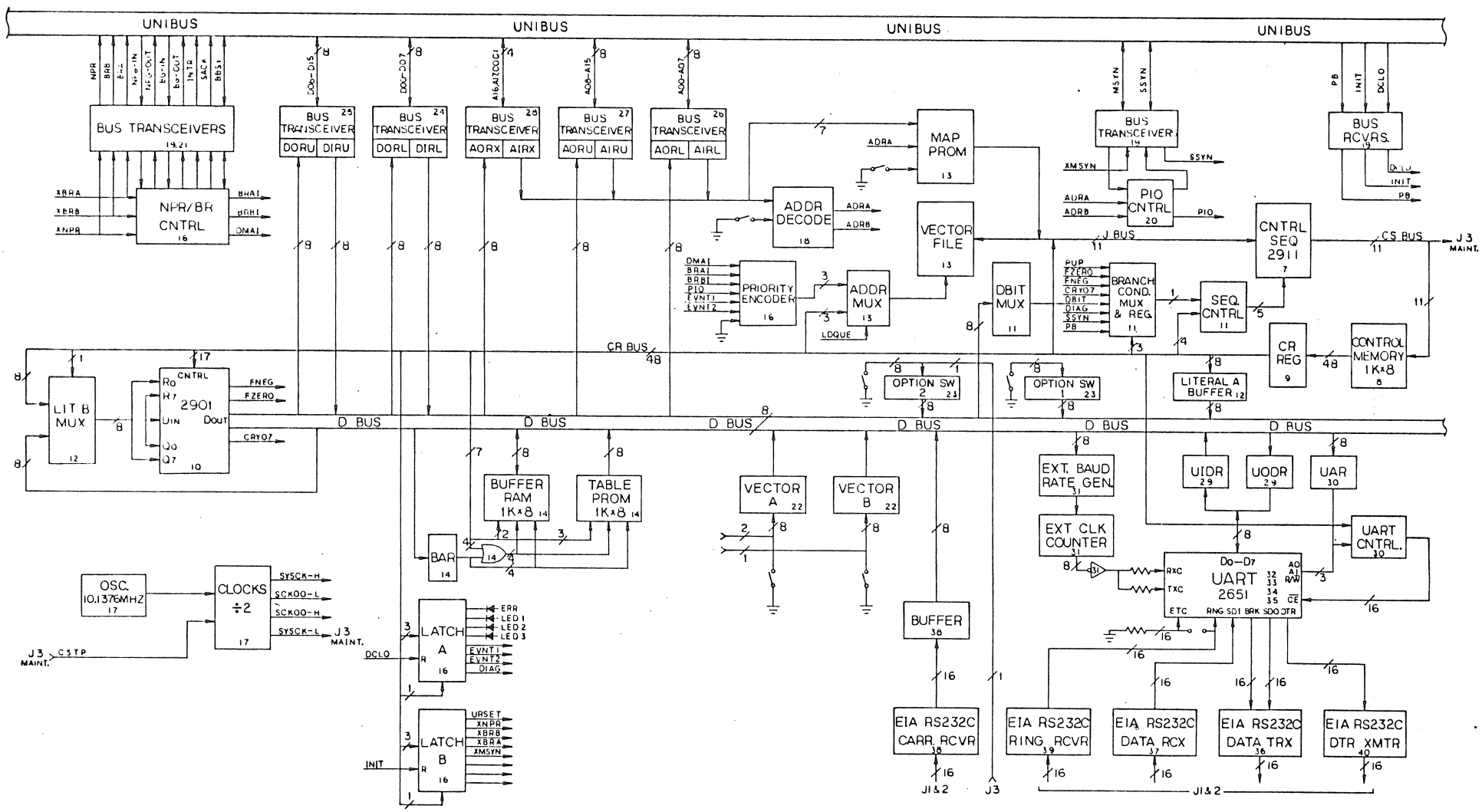

ACT ABLE COMPUTER TECHNOLOGY

16 CH ASYNC. DMA COM. CNTRLR. BLOCK DIAGRAM

SIZE D DRAWING NO. 10103003

	2901 DATA PATH PHRASE						DBUS PHRASE		ORDER PHRASE			SEQUENCE CONTROL PHRASE			
	47,46,45,44	43,42,41,40	39,38	37,36	35,34,33,32	31,30	29,28,27,26	25,24	23,22,21,20	19,18,17,16	15	14,13,12	11,10	09,08	07,06,05,04	03,02,01,00	
	D	+	S	C	A	B	D/S		LO			T	S	AD			
	2901 CONTROL			CRY					LITERAL A					LIT B / RESUME DATA			
	DEST.	ALU	SOURCE R S		FILE	FILE	D DEST.	D SRCE.	ORDER	ADDR.	D	T/F TEST	SEQ.	BRANCH	ADDRESS		
Ø	Q	R + S	A Q	Ø	Ø	0	DBUS	LITA	NULL	RD_DATA ERR URSET	Ø	-GOTO	LITB	Ø	Ø		Ø
1	NOD	S − R	A B	1	1	1	BRR	TPRM	REL_PIO	WRT_DATA LED1 XNPR	1	-ALUZ	RETURN	1	1		1
2	B (BYPASS)	R − S	Ø Q		2	2	DORL	MEM	SET_INTR	RD_STAT LED2 XBRB		-ALUNEG	GOTO	2	2		2
3	B	R OR S	Ø B		3	3	DORU	MVR	RESUME	N/A LED3 XBRA		-CRY	CALL	3	3		3
4	BQ RIGHT	R AND S	Ø A		4	4	MAR	ALU	NOT USED	RD_MODE NOT USED XMSYN		-DBIT	MAP_PIO	4	4		4
5	B RIGHT	$\bar{R}$ AND S	D A		5	5	UODR	UIDR	UART	WRT_MODE EVNT1 NOT USED		-NO_DIAG	N/A	5	5		5
6	BQ LEFT	R XOR S	D Q		6	6	UAR	DIRL	A LATCH	RD_CMD EVNT2 NOT USED		-SSYN	VECTOR	6	6		6
7	B LEFT	R XNOR S	D Ø		7	7	MEM	DIRU	B LATCH	WRT_CMD DIAG NOT USED		-PB	N/A	7	7		7
8					8	8	AORL		N/A			GOTO		8	8		8
9					9	9	AORU		N/A			ALUZ		9	9		9
A					10	10	AORX		N/A			ALUNEG		A	A		A
B					11	11	NOT USED		N/A			CRY		B	B		B
C					12	12	N/A		N/A			DBIT		C	C		C
D					13	13	N/A		N/A			NO_DIAG		D	D		D
E					14	14	N/A		N/A			SSYN		E	E		E
F					15	15	N/A		N/A			PB		F	F		F
	47,46,45,44	43,42,41,40	39,38	37,36	35,34,33,32	31,30	29,28,27,26	25,24	23,22,21,20	19,18,17,16	15	14,13,12	11,10	09,08	07,06,05,04	03,02,01,00	

PRIORITY	EVENTS
7	PIO
6	DMAI
5	BRAI
4	BRBI
3	NOT USED
2	EVNT2
1	EVNT1
0	SCAN

SCALE	SIZE	DRAWING NO.
	B	10103003
DO NOT SCALE DRAWING		SHEET 4 OF 40

THIS INFORMATION CONTAINED HEREON IS THE PROPERTY OF ARLE COMPUTER TECHNOLOGY, INC. TRANSMITTAL, RECEIPT OR POSSESSION OF THIS INFORMATION DOES NOT EXPRESS, LICENSE, OR IMPLY ANY RIGHTS TO USE, SELL, OR MANUFACTURE FROM THIS INFORMATION AND NO REPRODUCTION OR PUBLICATION OF IT, IN WHOLE OR IN PART, SHALL BE MADE WITHOUT WRITTEN AUTHORIZATION FROM AN OFFICER OF THE ABOVE FIRM.

SHT	1	A	2	SHT
		A	+5V	6
		B		
		C	GND	6
		D		
		E		
		F		
		H		
		J		
		K		
		L		
		M		
28	BUS-A21-L	N		
28	BUS-A20-L	P		
		R		
		S		
6	GND	T		
		U		
		V		

SHT	1	C	2	SHT
21	BUS-NPG-IN-H	A	+5V	6
21	BUS-NPGO-H	B	-15V	6
		C	GND	6
		D	BUS-D15-L	25
		E	BUS-D14-L	25
		F	BUS-D13-L	25
25	BUS-D11-L	H	BUS-D12-L	25
		J	BUS-D10-L	25
		K	BUS-D09-L	25
		L	BUS-D08-L	25
		M	BUS-D07-L	24
19	BUS-DCLO-L	N	BUS-D04-L	24
		P	BUS-D05-L	24
		R	BUS-D01-L	24
19	BUS-PB-L	S	BUS-D00-L	24
6	GND	T	BUS-D03-L	24
6	+15V	U	BUS-D02-L	24
		V	BUS-D06-L	24

SHT	1	E	2	SHT
		A	+5V	6
		B		
27	BUS-A12-L	C	GND	6
28	BUS-A17-L	D	BUS-A15-L	27
19	BUS-MSYN-L	E	BUS-A16-L	28
26	BUS-A02-L	F	BUS-C1-L	28
26	BUS-A01-L	H	BUS-A00-L	26
19	BUS-SSYN-L	J	BUS-C0-L	28
27	BUS-A14-L	K	BUS-A13-L	27
27	BUS-A11-L	L		
		M		
		N	BUS-A08-L	27
27	BUS-A10-L	P	BUS-A07-L	26
27	BUS-A09-L	R		
		S		
6	GND	T		
26	BUS-A06-L	U	BUS-A04-L	26
26	BUS-A05-L	V	BUS-A03-L	26

SHT	1	B	2	SHT
		A	+5V	6
		B		
		C	GND	6
		D		
28	BUS-A19-L	E	BUS-A18-L	28
		F		
		H		
		J		
		K		
		L		
		M		
		N		
		P		
		R		
		S		
6	GND	T		
		U		
		V		

SHT	1	D	2	SHT
		A	+5V	6
		B		
		C	GND	6
		D	BUS-BR7-L	21
		E	BUS-BR6-L	21
		F	BUS-BR5-L	21
		H	BUS-BR4-L	21
		J		
		K	BUS-BG7-IN-H	21
19	BUS-INIT-L	L	BUS-BG7-OUT-H	21
		M	BUS-BG6-IN-H	21
		N	BUS-BG6-OUT-H	21
		P	BUS-BG5-IN-H	21
		R	BUS-BG5-OUT-H	21
		S	BUS-BG4-IN-H	21
6	GND	T	BUS-BG4-OUT-H	21
		U		
		V		

SHT	1	F	2	SHT
		A	+5V	6
		B		
		C	GND	6
19	BUS-BBSY-L	D		
		E		
		F		
		H		
19	BUS-NPR-L	J		
		K		
		L		
19	BUS-INTR-L	M		
		N		
		P		
		R		
		S		
6	GND	T	BUS-SACK-L	19
		U		
		V		

SCALE	SIZE	DRAWING NO.
	B	10103003
DO NOT SCALE DRAWING		SHEET 5 OF 40

THIS INFORMATION CONTAINED HEREON IS THE PROPERTY OF ABLE COMPUTER TECHNOLOGY, INC. TRANSMITTAL, RECEIPT OR POSSESSION OF THE INFORMATION DOES NOT EXPRESS, LICENSE OR IMPLY ANY RIGHTS TO USE, SELL OR MANUFACTURE FROM THIS INFORMATION AND NO REPRODUCTION OR PUBLICATION OF IT, IN WHOLE OR IN PART, SHALL BE MADE WITHOUT WRITTEN AUTHORIZATION FROM AN OFFICER OF THE ABOVE FIRM.

SHT		J1			SHT
40	DTR00-H	1	2	CARR00-H	38
40	DTR01-H	3	4	CARR01-H	38
40	DTR02-H	5	6	CARR02-H	38
40	DTR03-H	7	8	CARR03-H	38
40	DTR04-H	9	10	CARR04-H	38
40	DTR05-H	11	12	CARR05-H	38
40	DTR06-H	13	14	CARR06-H	38
40	DTR07-H	15	16	CARR07-H	38
23	MAIN-H	17	18	GND	36
36	TXD00-H	19	20	RING00-H	39
37	RXD00-H	21	22	GND	36
36	TXD01-H	23	24	RING01-H	39
37	RXD01-H	25	26	GND	36
36	TXD02-H	27	28	RING02-H	39
37	RXD02-H	29	30	GND	6
36	TXD03-H	31	32	RING03-H	39
37	RXD03-H	33	34	GND	6
36	TXD04-H	35	36	RING04-H	39
37	RXD04-H	37	38	GND	6
36	TXD05-H	39	40	RING05-H	39
37	RXD05-H	41	42	GND	6
36	TXD06-H	43	44	RING06-H	39
37	RXD06-H	45	46	GND	6
36	TXD07-H	47	48	RING07-H	39
37	RXD07-H	49	50	GND	6

SHT		J2			SHT
40	DTR08-H	1	2	CARR08-H	38
40	DTR09-H	3	4	CARR09-H	38
40	DTR10-H	5	6	CARR10-H	38
40	DTR11-H	7	8	CARR11-H	38
40	DTR12-H	9	10	CARR12-H	38
40	DTR13-H	11	12	CARR13-H	38
40	DTR14-H	13	14	CARR14-H	38
40	DTR15-H	15	16	CARR15-H	38
36	GND	17	18	GND	36
36	TXD08-H	19	20	RING08-H	39
37	RXD08-H	21	22	GND	36
36	TXD09-H	23	24	RING09-H	39
37	RXD09-H	25	26	GND	36
36	TXD10-H	27	28	RING10-H	39
37	RXD10-H	29	30	GND	6
36	TXD11-H	31	32	RING11-H	39
37	RXD11-H	33	34	GND	6
36	TXD12-H	35	36	RING12-H	39
37	RXD12-H	37	38	GND	6
36	TXD13-H	39	40	RING13-H	39
37	RXD13-H	41	42	GND	6
36	TXD14-H	43	44	RING14-H	39
37	RXD14-H	45	46	GND	6
36	TXD15-H	47	48	RING15-H	39
37	RXD15-H	49	50	GND	6

SHT		J3			SHT
	GND	1	2	DB000-H	24
24	DB001-H	3	4	DB002-H	24
24	DB003-H	5	6	DB004-H	24
24	DB005-H	7	8	DB006-H	24
24	DB007-H	9	10	GND	
7	CS009-H	11	12		
	+5V	13	14	CS010-H	7
	GND	15	16	CS000-H	7
7	CS001-H	17	18	CS002-H	7
7	CS003-H	19	20	CS004-H	7
7	CS005-H	21	22	CS006-H	7
7	CS007-H	23	24	GND	
7	CS008-H	25	26		
17	MINIT-L	27	28		
17	MDCL0-L	29	30		
17	CSTP-L	31	32		
17	SYSCK-L	33	34	GND	
22	SSW1-L	35	36	SSW2-L	22
22	SSW3-L	37	38	CSS1-H	7
	+5V	39	40	+5V	

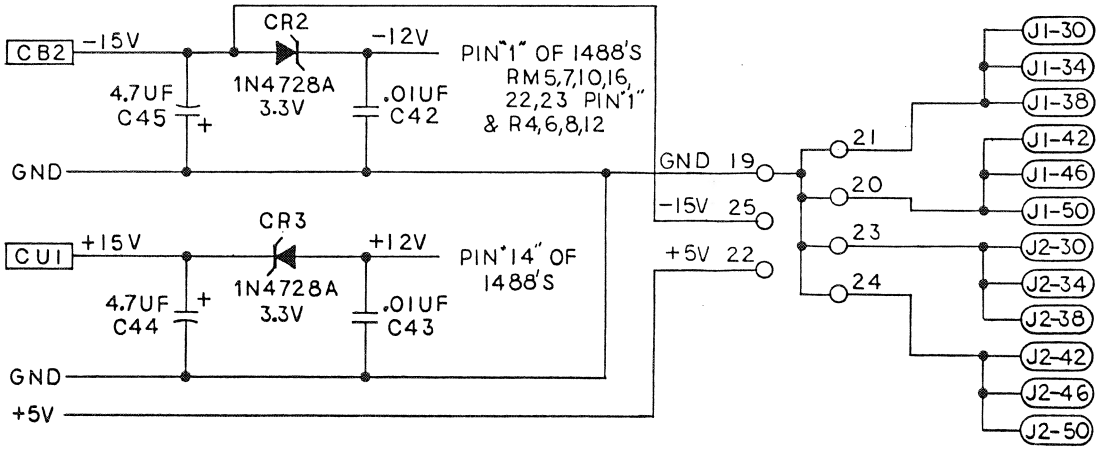

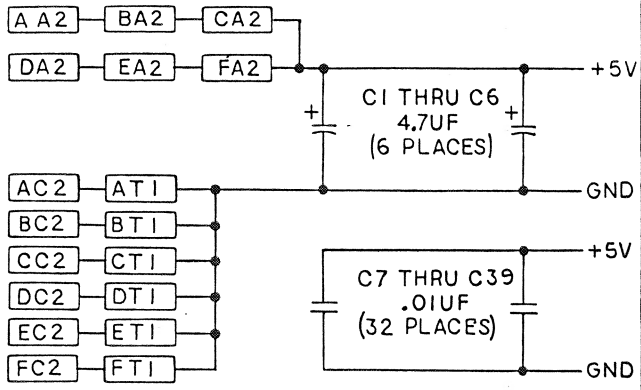

SCALE	SIZE	DRAWING NO.
	B	10103003
DO NOT SCALE DRAWING		SHEET 6 OF 40

THIS INFORMATION CONTAINED HEREON IS THE PROPERTY OF ABLE COMPUTER TECHNOLOGY INC. TRANSMITTAL, RECEIPT OR POSSESSION OF THE INFORMATION DOES NOT EXPRESS, LICENSE, OR GIVE ANY RIGHTS TO USE, SELL OR MANUFACTURE FROM THIS INFORMATION AND NO REPRODUCTION OR PUBLICATION OF IT, IN WHOLE OR IN PART, SHALL BE MADE WITHOUT WRITTEN AUTHORIZATION FROM AN OFFICER OF THE ABOVE FIRM.

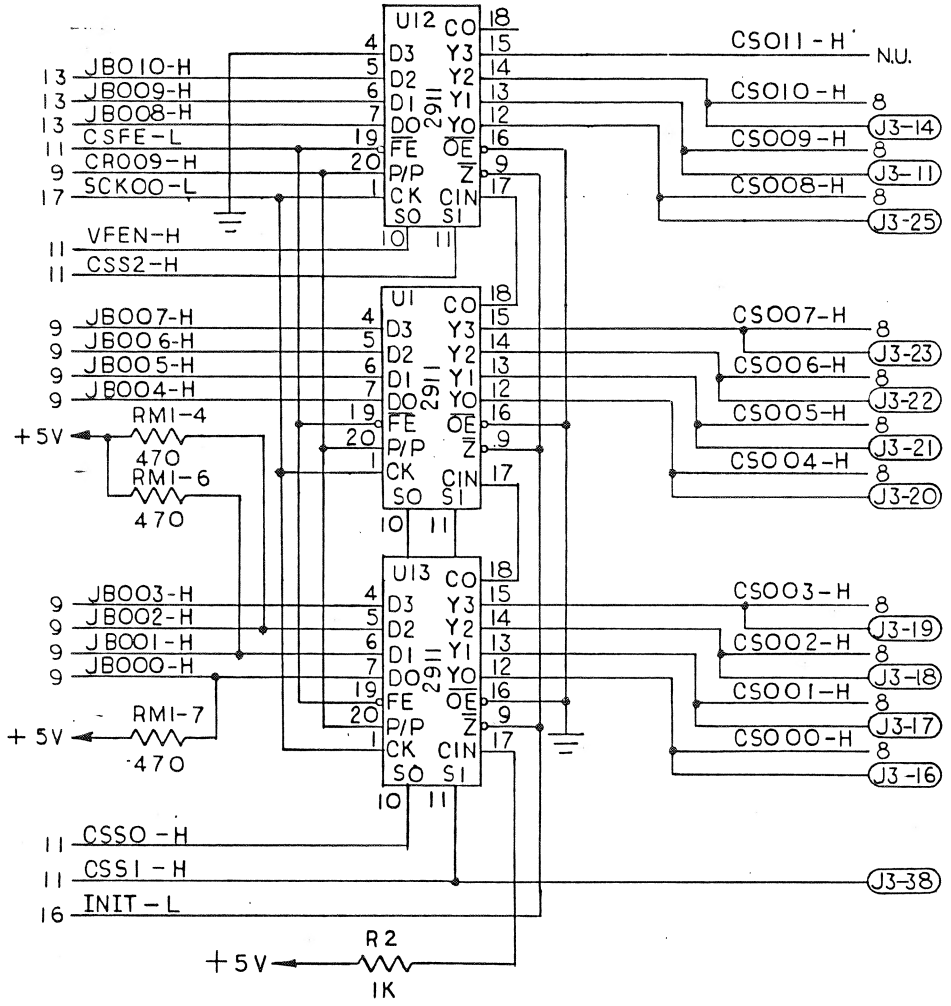

CONTROL SEQUENCER

SI	SO	OPERATION
0	0	INCREMENT
0	1	NOT IMPLEMENTED
1	0	RETURN
1	1	GOTO/MAP/CALL/VECTOR

SCALE	SIZE	DRAWING NO.
	B	10103003
DO NOT SCALE DRAWING		SHEET 7 OF 40

THIS INFORMATION CONTAINED HEREIN IS THE PROPERTY OF ABLE COMPUTER TECHNOLOGY INC. TRANSMITTAL, RECEIPT OR POSSESSION OF THIS INFORMATION DOES NOT EXPRESS, LICENSE, OR IMPLY ANY RIGHTS TO USE, SELL, OR MANUFACTURE FROM THIS INFORMATION AND NO REPRODUCTION OR PUBLICATION OF IT, IN WHOLE OR IN PART, SHALL BE MADE WITHOUT WRITTEN AUTHORIZATION FROM AN OFFICER OF THE ABOVE FIRM.

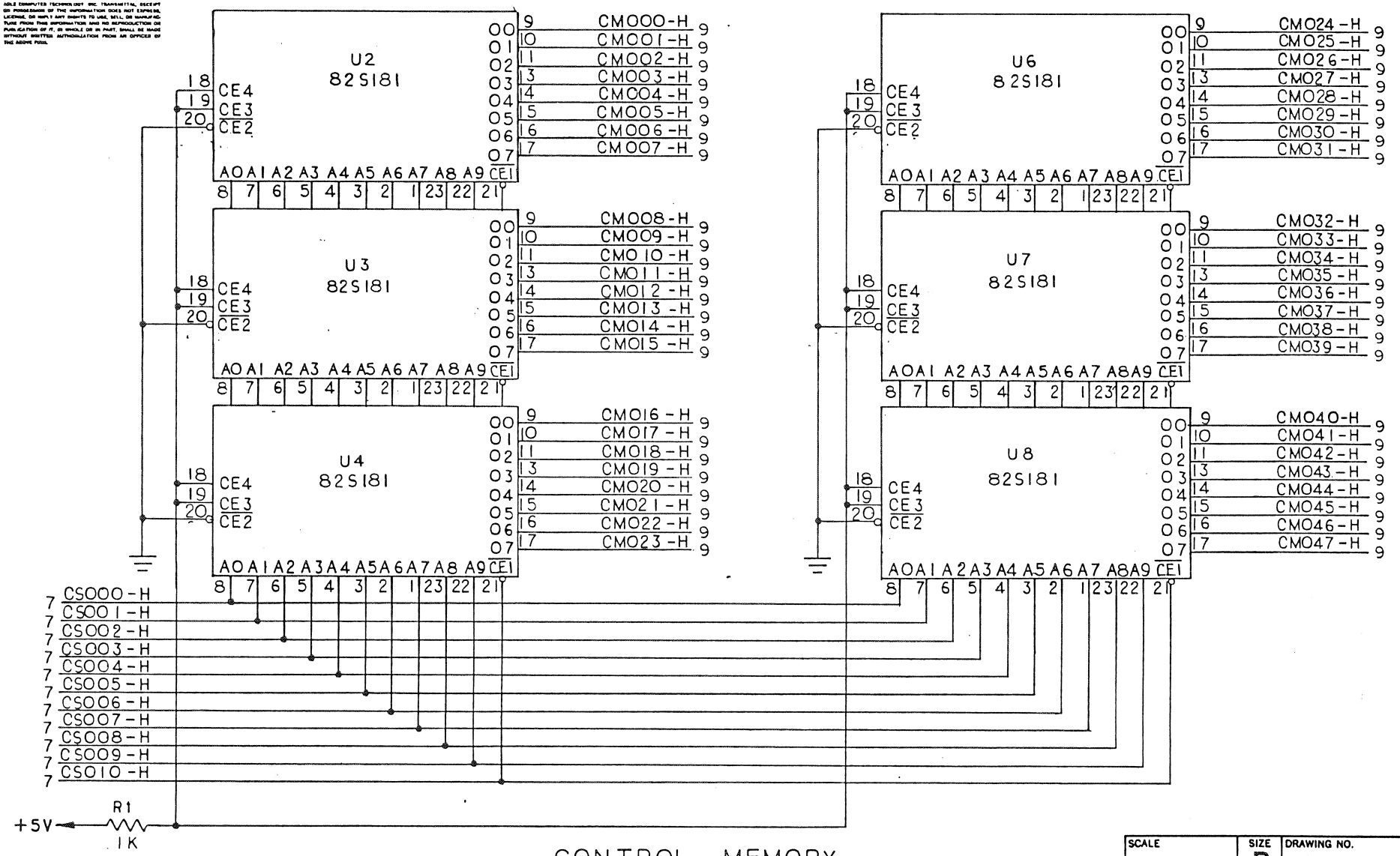

CONTROL MEMORY

SCALE	SIZE	DRAWING NO.
	B	10103003
DO NOT SCALE DRAWING		SHEET 8 OF 40

THE INFORMATION CONTAINED HEREON IS THE PROPERTY OF ABLE COMPUTER TECHNOLOGY INC. TRANSMITTAL, RECEIPT OR POSSESSION OF THE INFORMATION DOES NOT EXPRESS, LICENSE, OR SUPPLY ANY RIGHTS TO USE, SELL, OR MANUFACTURE FROM THIS INFORMATION AND NO REPRODUCTION OR PUBLICATION OF IT, IN WHOLE OR IN PART, SHALL BE MADE WITHOUT WRITTEN AUTHORIZATION FROM AN OFFICER OF THE ABOVE FIRM.

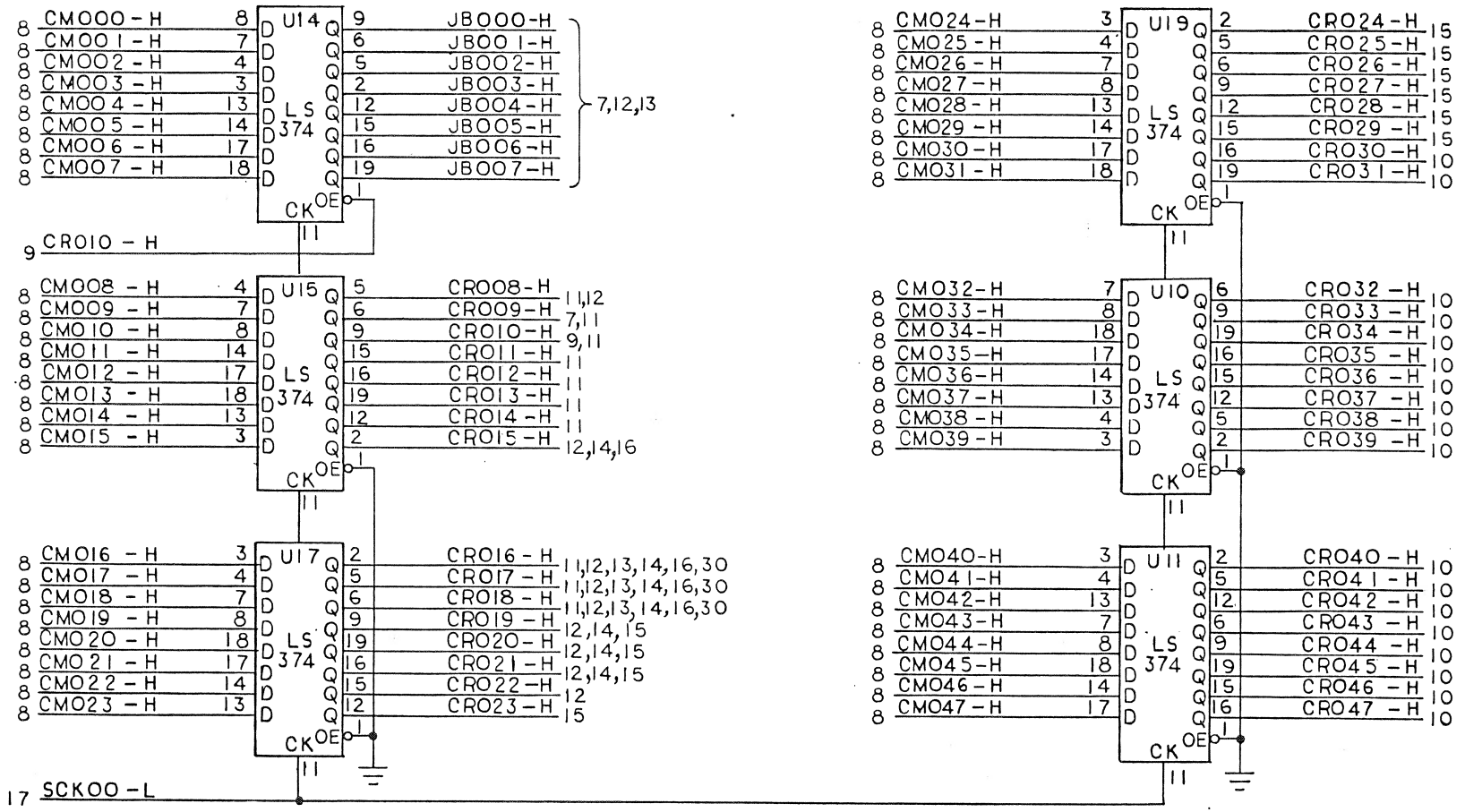

CONTROL REGISTER

SCALE	SIZE	DRAWING NO.
	B	10103003
DO NOT SCALE DRAWING		SHEET 9 OF 40

BISHOP GRAPHICS/ACCUPRESS

THIS INFORMATION CONTAINED HEREIN IS THE PROPERTY OF ADI & COMPUTER TECHNOLOGY INC. TRANSMITTAL, RECEIPT OR POSSESSION OF THIS INFORMATION DOES NOT EXPRESS, LICENSE, OR WAIVE ANY RIGHTS TO USE, SELL, OR MANUFACTURE FROM THIS INFORMATION AND NO REPRODUCTION OR PUBLICATION OF IT, IN WHOLE OR IN PART, SHALL BE MADE WITHOUT WRITTEN AUTHORIZATION FROM AN OFFICER OF THIS ADDRESS FIRM.

MICROPROCESSOR

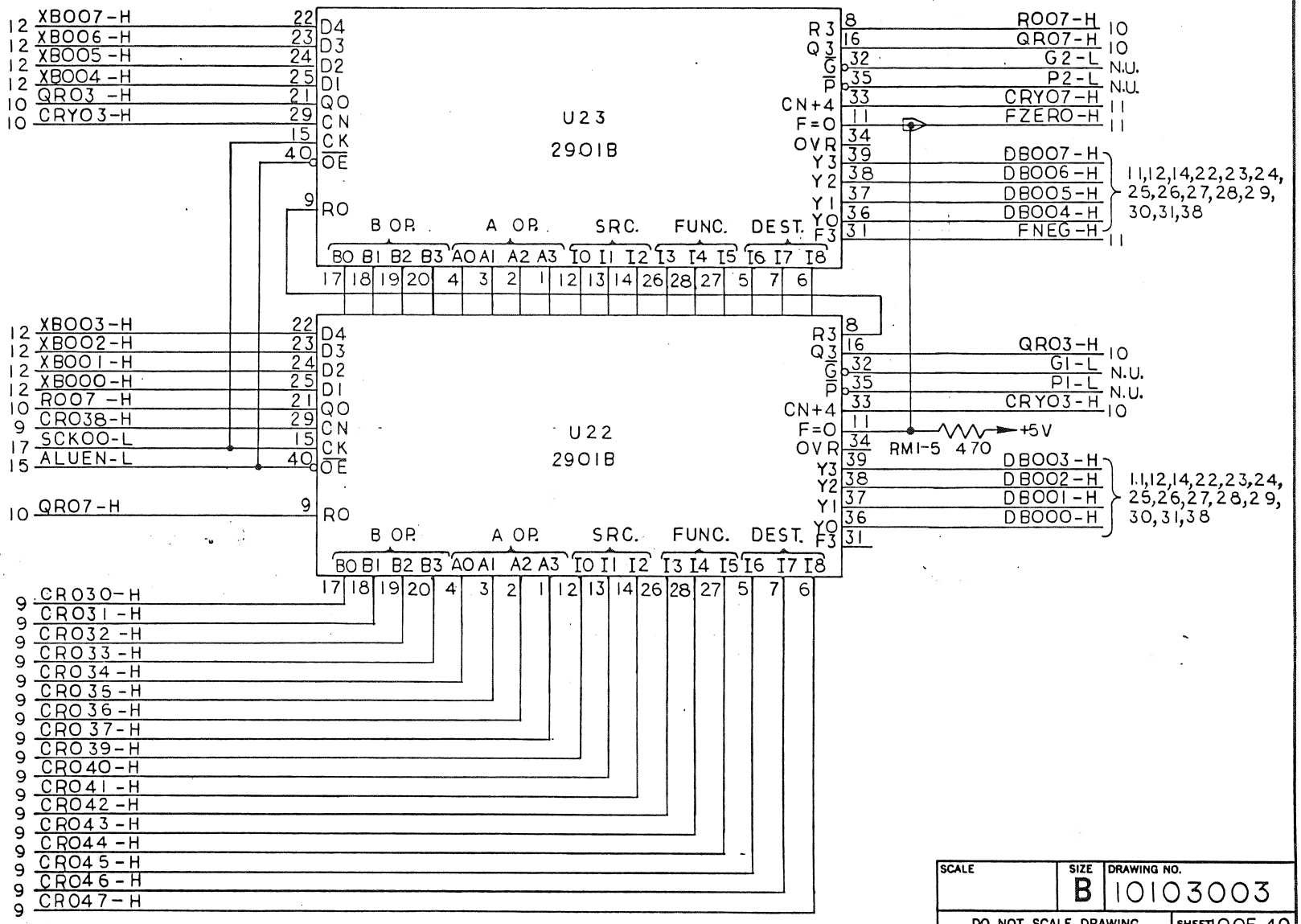

SCALE	SIZE	DRAWING NO.
	B	10103003
DO NOT SCALE DRAWING		SHEET 10 OF 40

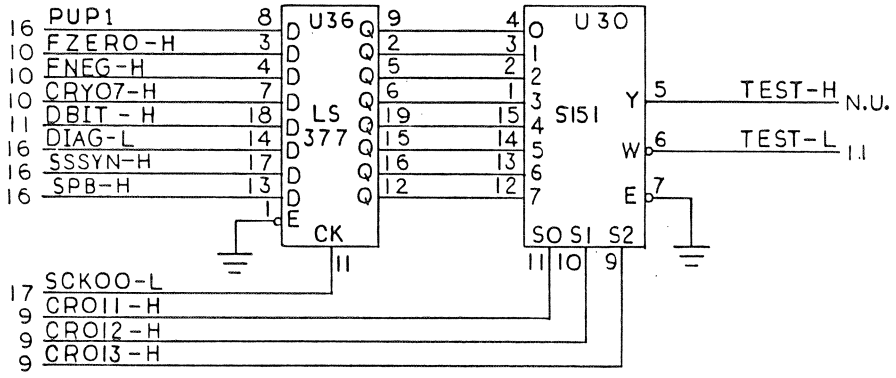

TEST REGISTER AND MUX

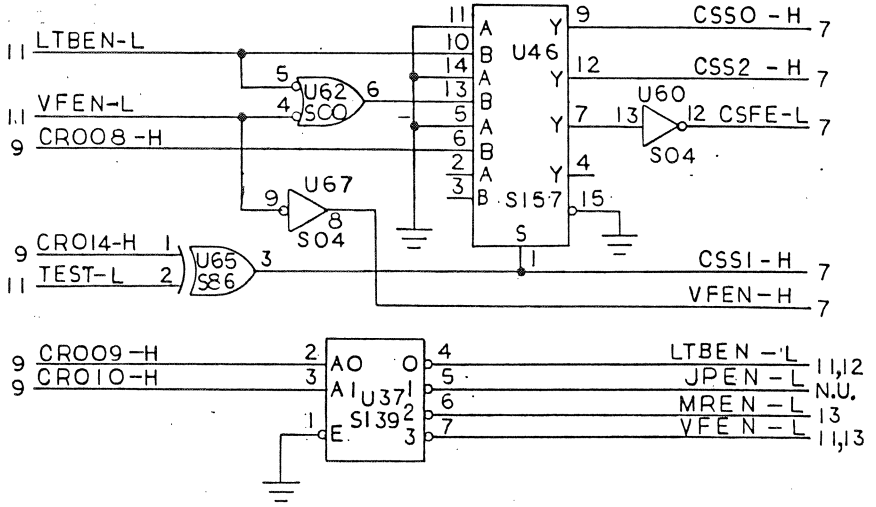

SEQUENCE CONTROL

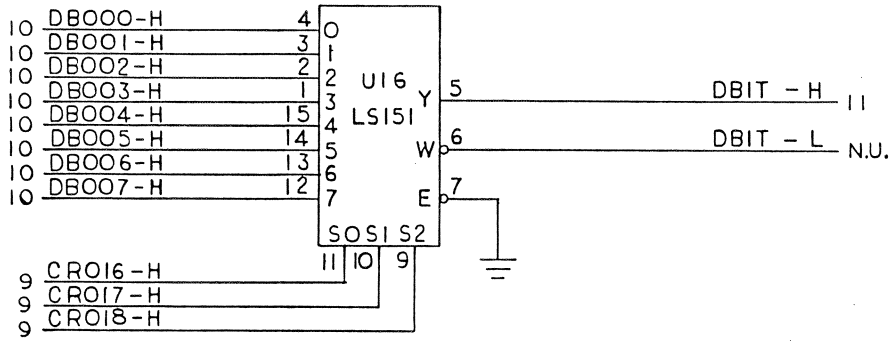

DATA BIT TEST

SCALE	SIZE	DRAWING NO.
	B	10103003
DO NOT SCALE DRAWING		SHEET 11 OF 40

THIS INFORMATION CONTAINED HEREON IS THE PROPERTY OF ABLE COMPUTER TECHNOLOGY INC. TRANSMITTAL, RECEIPT OR POSSESSION OF THIS INFORMATION DOES NOT EXPRESS, LICENSE, OR IMPLY ANY RIGHTS TO USE, SELL, OR MANUFACTURE FROM THIS INFORMATION AND NO REPRODUCTION OR PUBLICATION OF IT, OR WHICH IT OR ITS PART, SHALL BE MADE WITHOUT WRITTEN AUTHORIZATION FROM AN OFFICER OF THIS ABOVE FIRM.

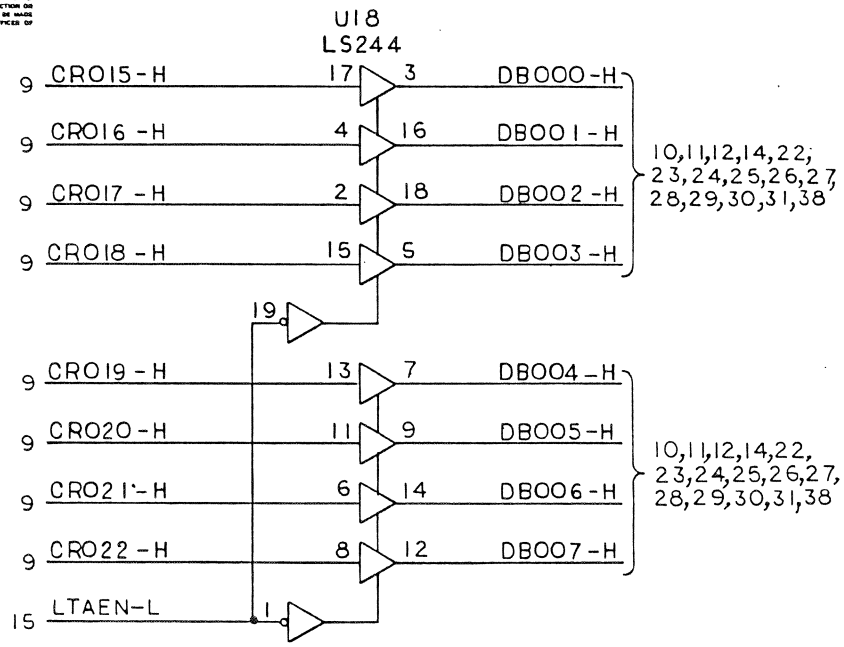

LITERAL A

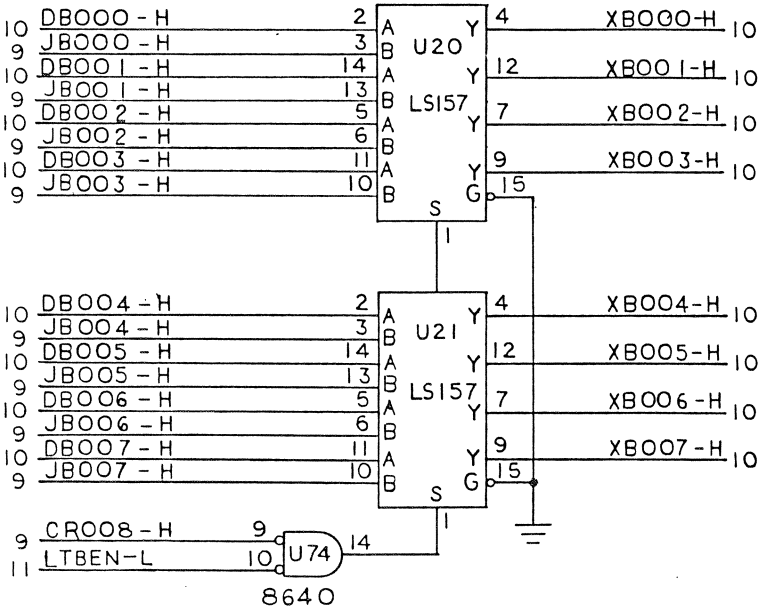

LITERAL B MUX

SCALE	SIZE	DRAWING NO.
	B	10103003
DO NOT SCALE DRAWING		SHEET 12 OF 40

THIS INFORMATION (DOCUMENT) IS THE PROPERTY OF ABLE COMPUTER TECHNOLOGY, INC. TRANSMITTAL, RECEIPT OR POSSESSION OF THIS INFORMATION DOES NOT EXPRESS, LICENSE, OR IMPLY ANY RIGHTS TO USE, SELL OR MANUFACTURE FROM THIS INFORMATION AND NO REPRODUCTION OR PUBLICATION OF IT, IN WHOLE OR IN PART, SHALL BE MADE WITHOUT WRITTEN AUTHORIZATION FROM AN OFFICER OF THE ABOVE FIRM.

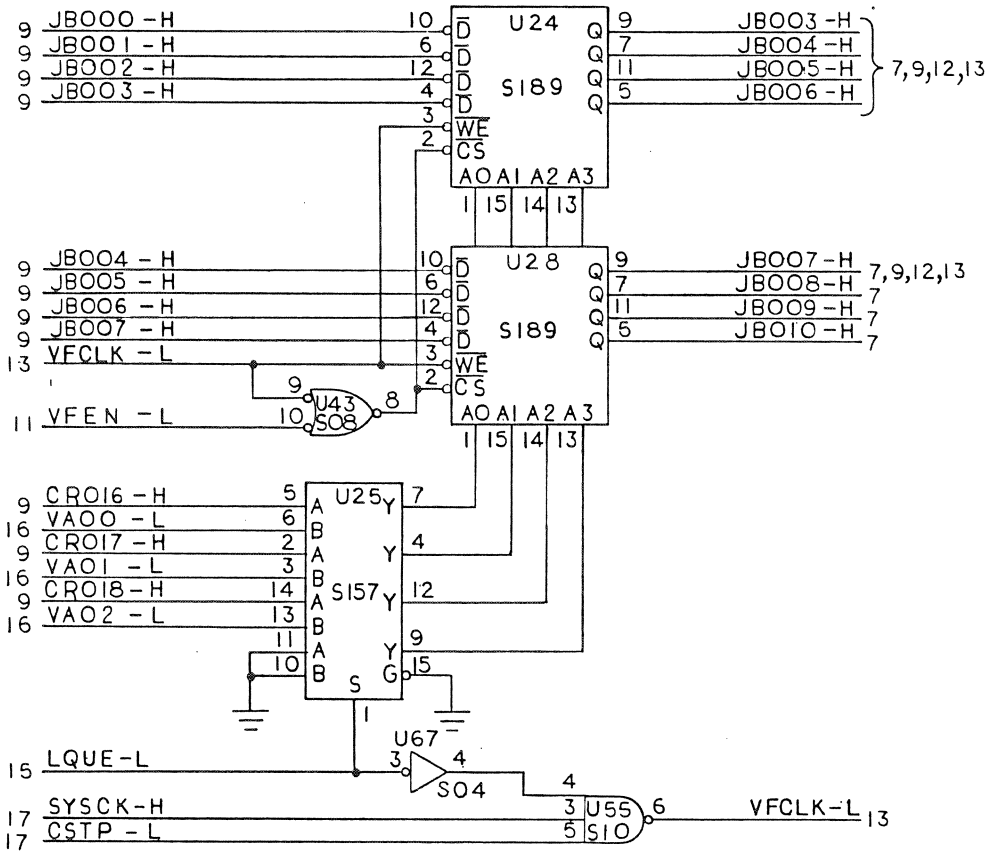

VECTOR FILE

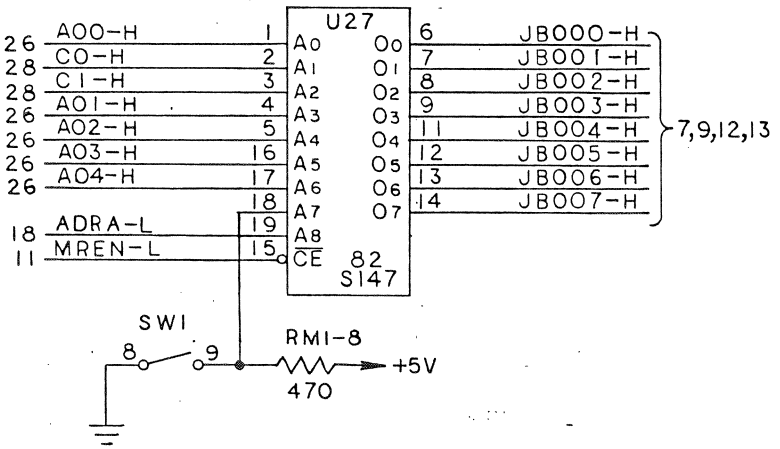

MAP PROM

SCALE	SIZE	DRAWING NO.
	B	10103003
DO NOT SCALE DRAWING		SHEET 13 OF 40

DOC. ORIGINAL ... THIS DRAWING ... LICENSE, OR COPY ANY RIGHTS TO USE, SELL OR MANUFACTURE FROM THIS INFORMATION (AND) NO REPRODUCTION OR PUBLICATION OF IT, IN WHOLE OR IN PART, SHALL BE MADE WITHOUT WRITTEN AUTHORIZATION FROM AN OFFICER OF THE ABOVE FIRM.

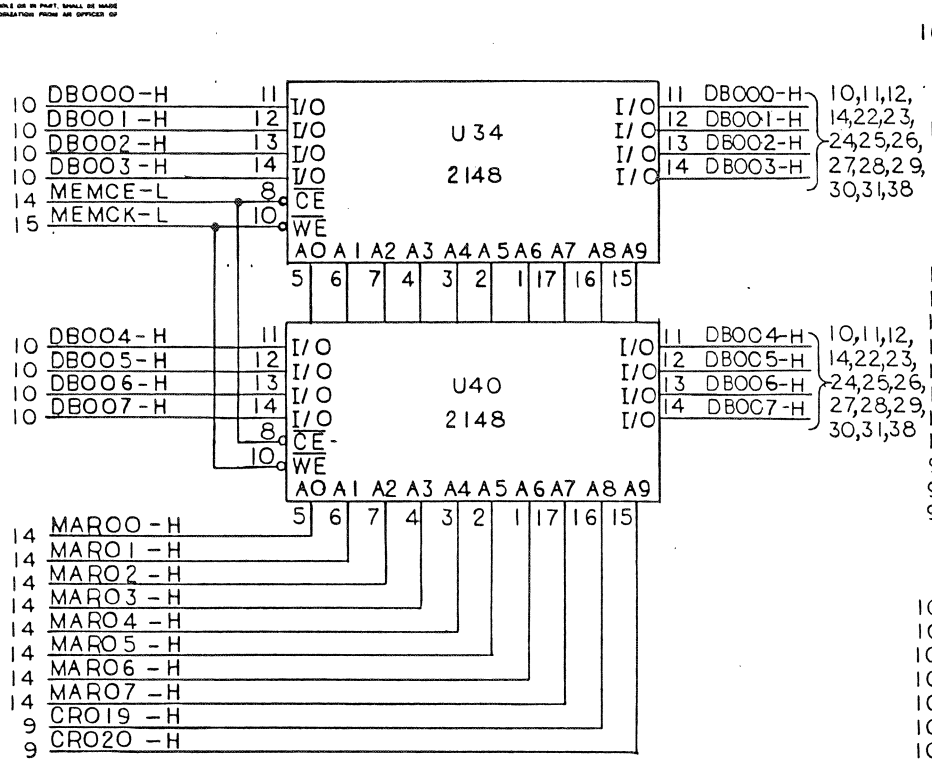

1 X 8 MEMORY

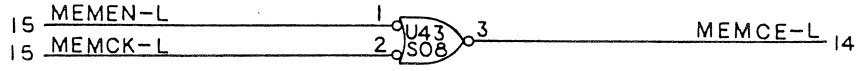

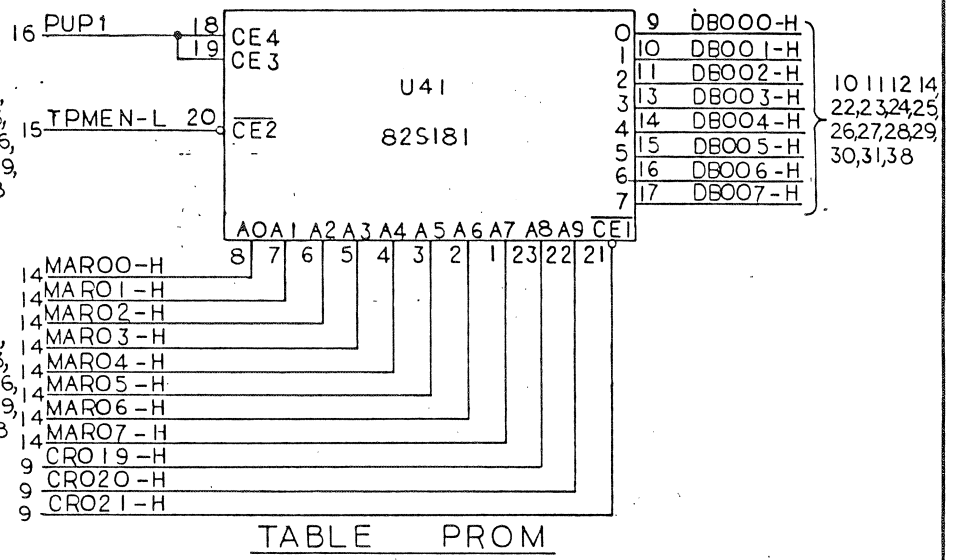

TABLE PROM

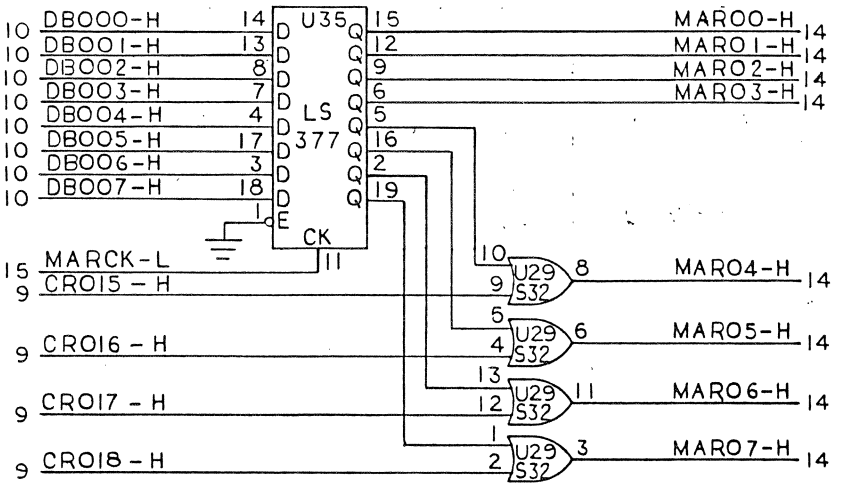

MEMORY ADDRESS REGISTER

SCALE	SIZE	DRAWING NO.
	B	10103003
DO NOT SCALE DRAWING	SHEET 14 OF 40	

THE INFORMATION CONTAINED HEREIN IS THE PROPERTY OF ABLE COMPUTER TECHNOLOGY INC. TRANSMITTAL, RECEIPT OR POSSESSION OF THE INFORMATION DOES NOT EXPRESS, LICENSE, OR IMPLY ANY RIGHTS TO USE, SELL OR MANUFACTURE FROM THIS INFORMATION AND NO REPRODUCTION OR PUBLICATION OF IT IN WHOLE OR IN PART SHALL BE MADE WITHOUT WRITTEN AUTHORIZATION FROM AN OFFICER OF THE ABOVE FIRM.

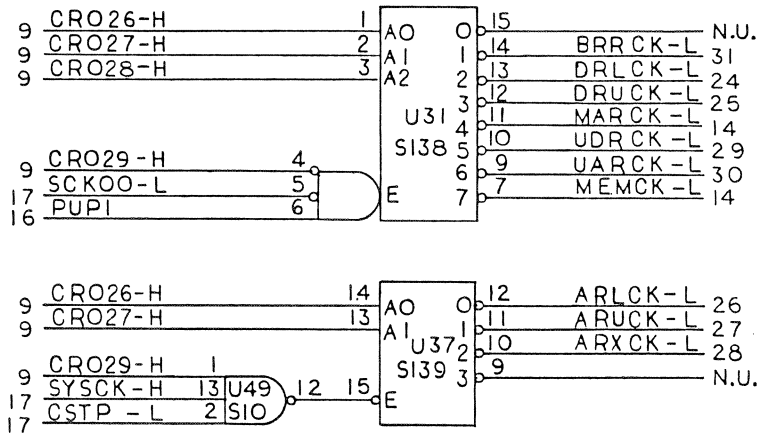

DESTINATION CLOCKS

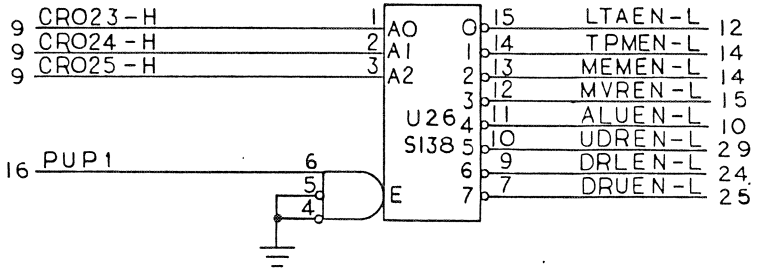

SOURCE ENABLES

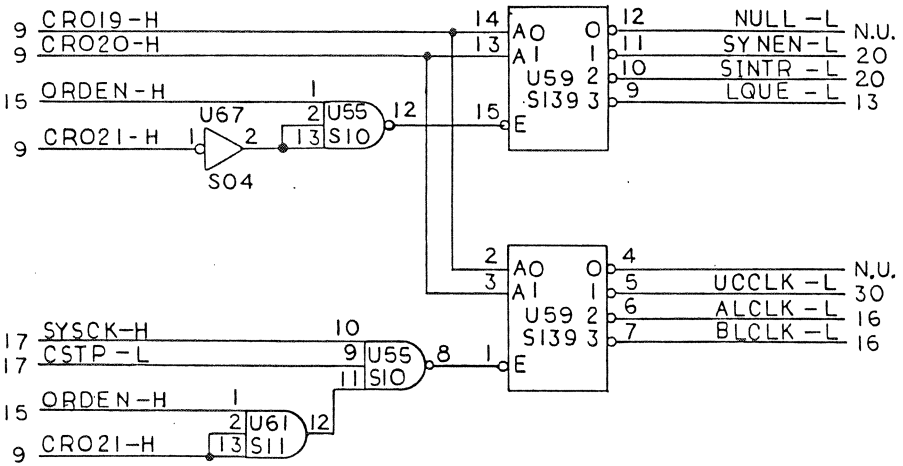

ORDER DECODE

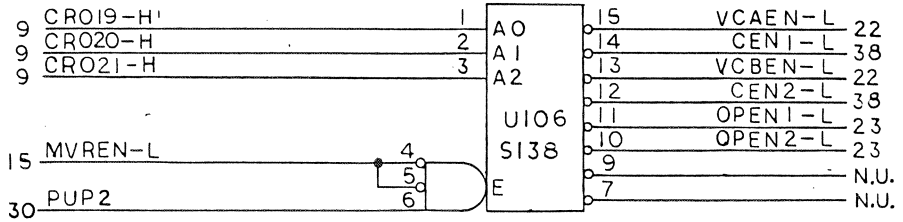

VECTOR AND CARRIER ENABLES

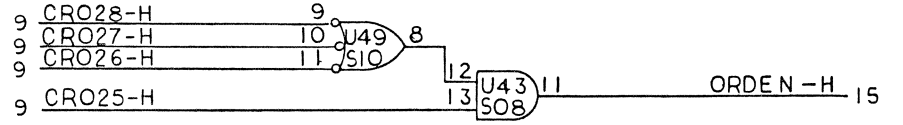

ORDER ENABLE

SCALE	SIZE	DRAWING NO.
	B	10103003
DO NOT SCALE DRAWING		SHEET 15 OF 40

BISHOP GRAPHICS/ACCUBRESS

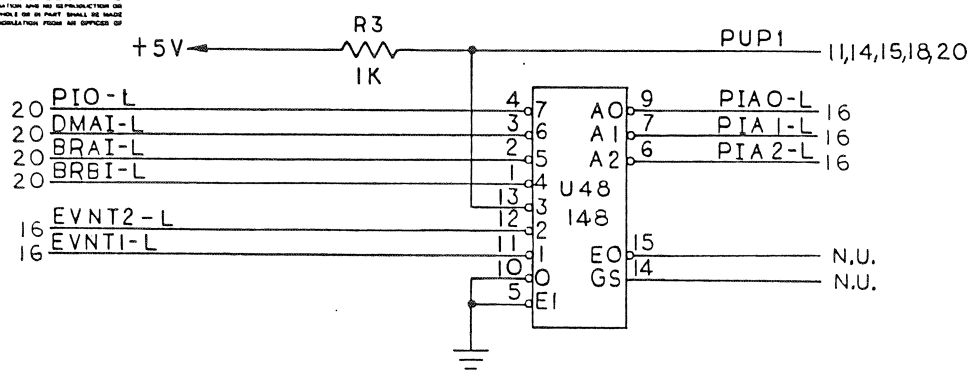

EVENT PRIORITY

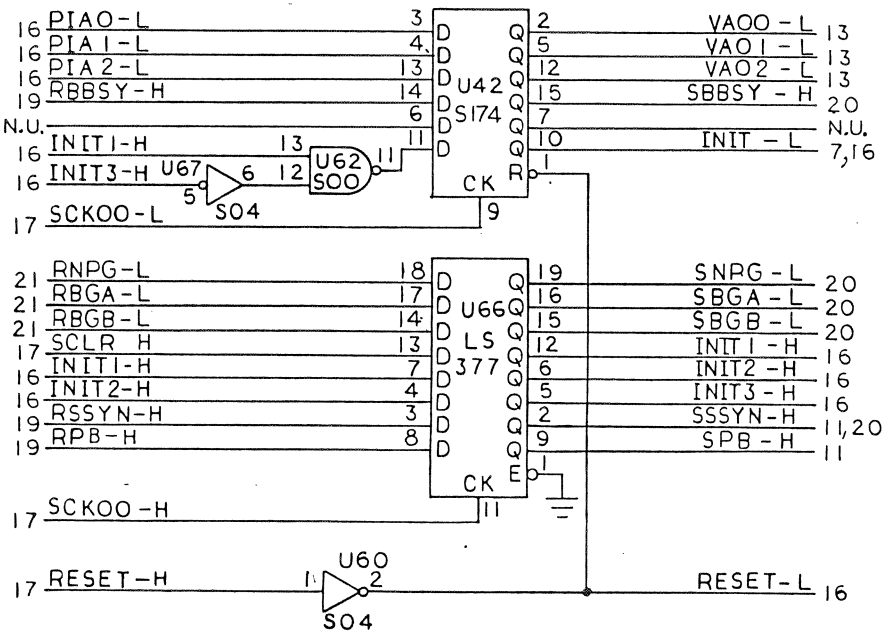

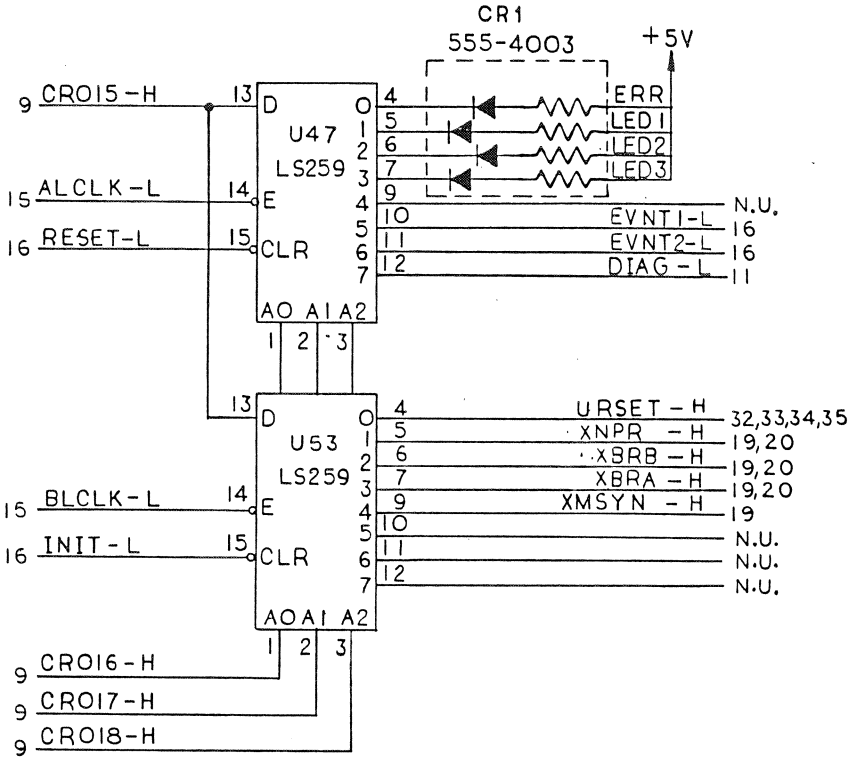

A AND B LATCHES

SCALE	SIZE	DRAWING NO.
	B	10103003
DO NOT SCALE DRAWING		SHEET 16 OF 40

THIS INFORMATION CONTAINED HEREIN IS THE PROPERTY OF ABLE COMPUTER TECHNOLOGY INC. TRANSMITTAL, RECEIPT OR POSSESSION OF THIS INFORMATION DOES NOT EXPRESS, LICENSE, OR IMPLY ANY RIGHTS TO USE, SELL, OR MANUFACTURE FROM THIS INFORMATION WHICH HAS BEEN PRODUCTION OR PUBLICATION OF IT IN WHOLE OR IN PART SHALL BE MADE WITHOUT WRITTEN AUTHORIZATION FROM AN OFFICER OF THE ABOVE FIRM.

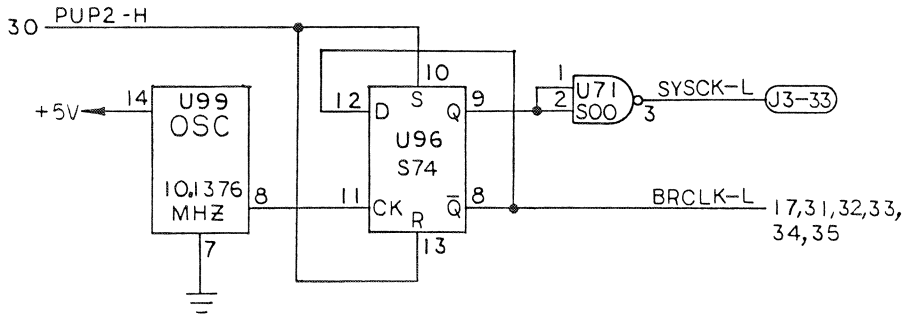

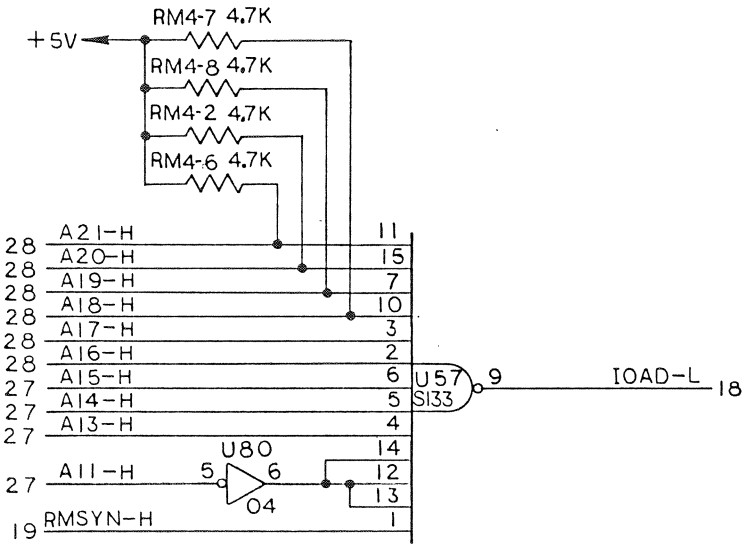

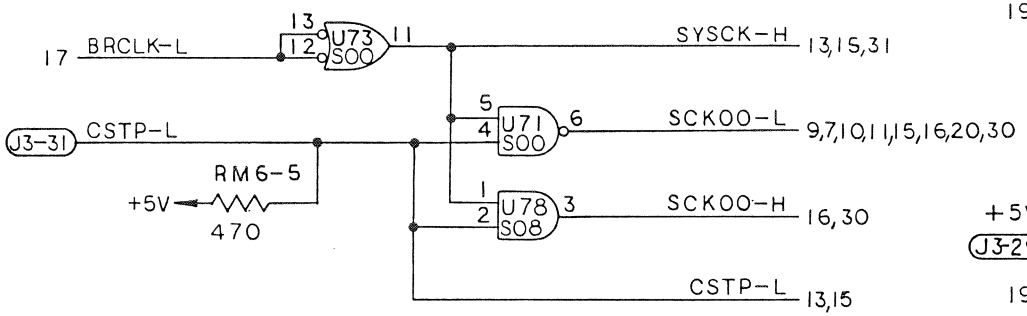

CLOCKS

I/O ADDRESS DETECT

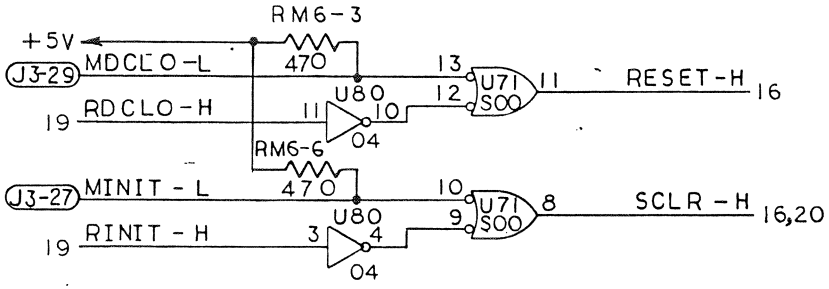

RESET AND SOFT CLEAR

SCALE	SIZE	DRAWING NO.
	B	10103003
DO NOT SCALE DRAWING		SHEET 17 OF 40

THE INFORMATION CONTAINED HEREON IS THE PROPERTY OF ABLE COMPUTER TECHNOLOGY, INC. TRANSMITTAL, DISCLOSURE OR POSSESSION OF THIS INFORMATION DOES NOT EXPRESS, LICENSE, OR IMPLY ANY RIGHTS TO USE, SELL, OR MANUFACTURE FROM THIS INFORMATION AND NO REPRODUCTION OR PUBLICATION OF IT OR WHOLE OR IN PART SHALL BE MADE WITHOUT WRITTEN AUTHORIZATION FROM AN OFFICER OF THE ABOVE FIRM.

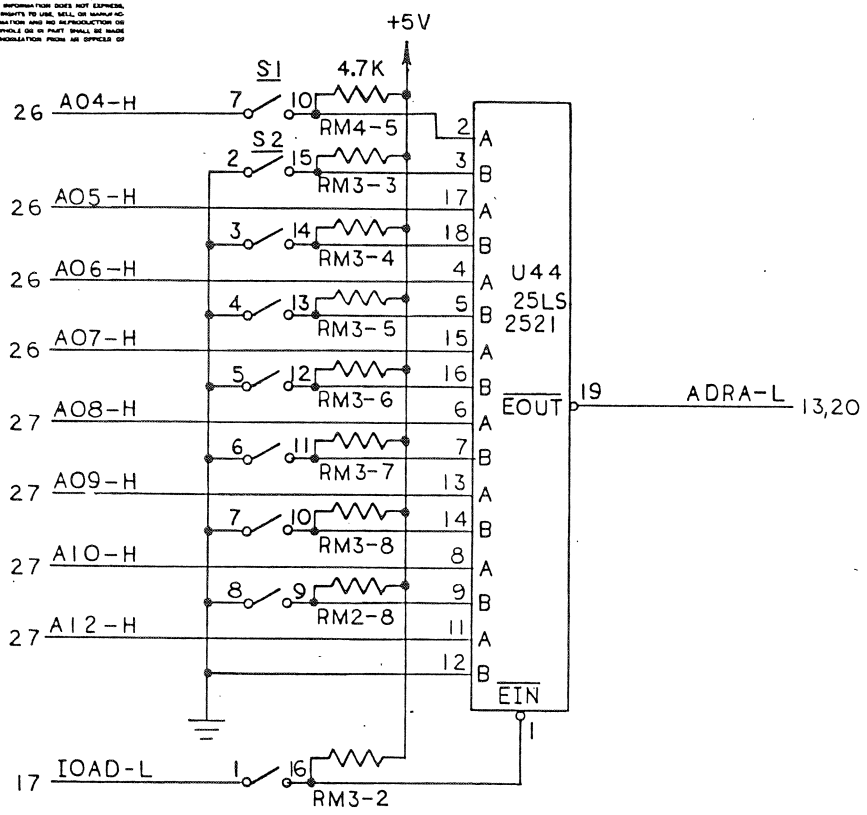

ADDRESS SELECT A

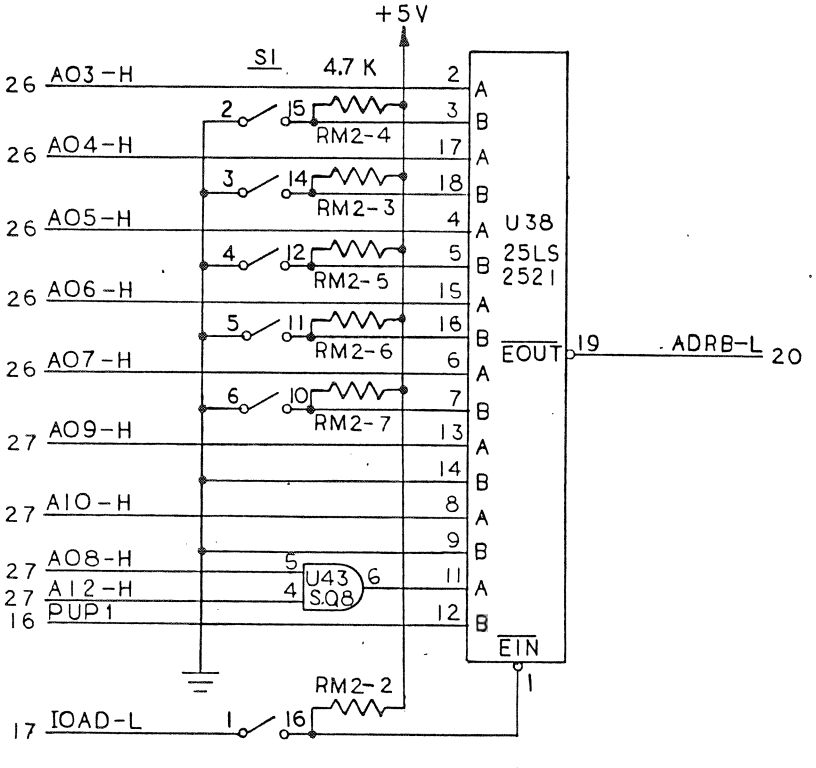

ADDRESS SELECT B

SCALE	SIZE	DRAWING NO.
	B	10103003
DO NOT SCALE DRAWING		SHEET 18 OF 40

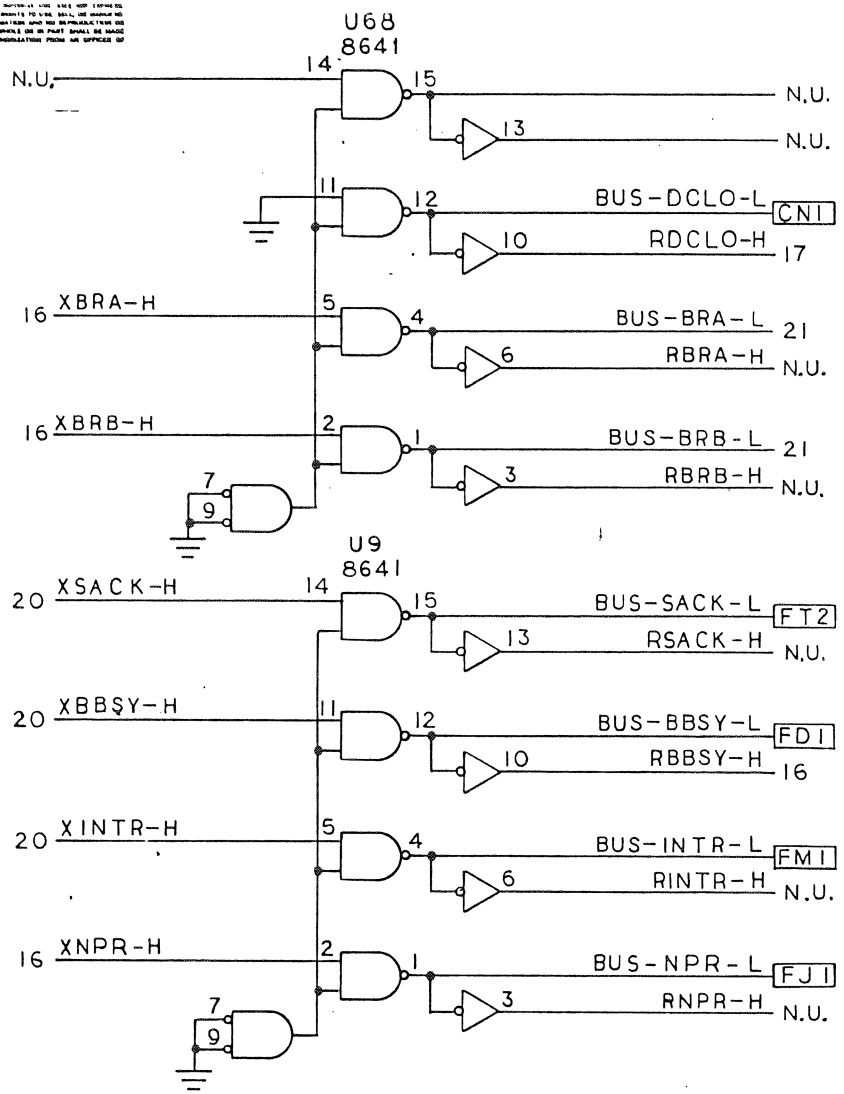

BUS TRANSCEIVERS

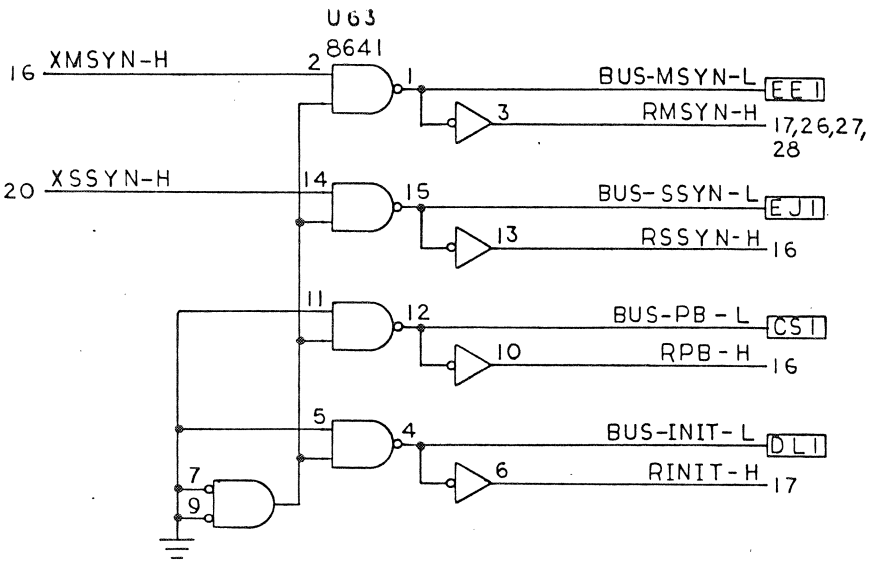

BUS TRANSCEIVERS

SCALE	SIZE	DRAWING NO.
	B	10103003
DO NOT SCALE DRAWING		SHEET 19 OF 40

THIS INFORMATION CONTAINED HEREIN IS THE PROPERTY OF ABLE COMPUTER TECHNOLOGY, INC. TRANSMITTAL, RECEIPT OR POSSESSION OF THE INFORMATION DOES NOT EXPRESS, LICENSE, OR GIVE ANY RIGHTS TO USE, SELL OR MANUFACTURE FROM THIS INFORMATION AND NO REPRODUCTION OR PUBLICATION OF IT, IN WHOLE OR IN PART, SHALL BE MADE WITHOUT WRITTEN AUTHORIZATION FROM AN OFFICER OF THE ABOVE FIRM.

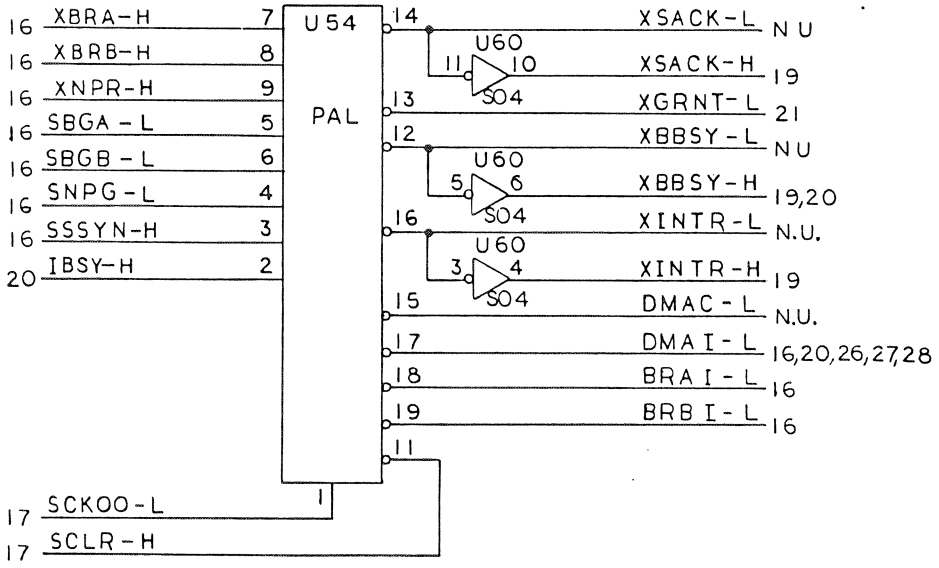

BUS CONTROLLER

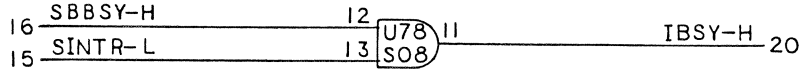

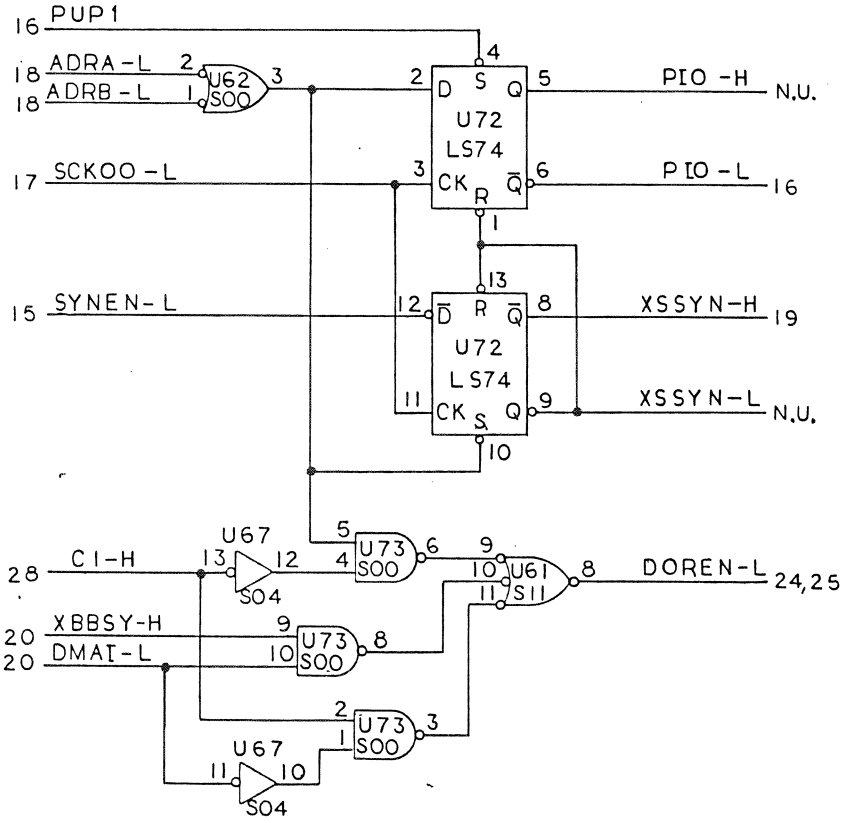

BUS CONTROL

SCALE	SIZE	DRAWING NO.
	B	10103003
DO NOT SCALE DRAWING		SHEET 200F 40

BISHOP GRAPHICS/ACCUPRESS

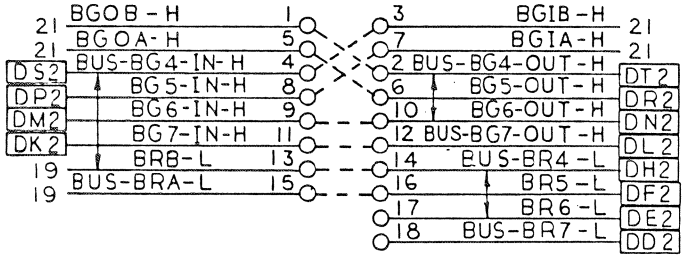

INTERRUPT LEVEL SELECTION

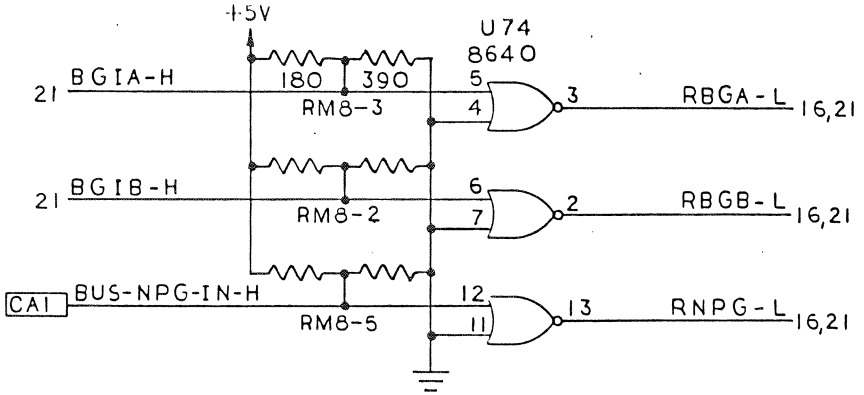

GRANT BUS RECEIVERS

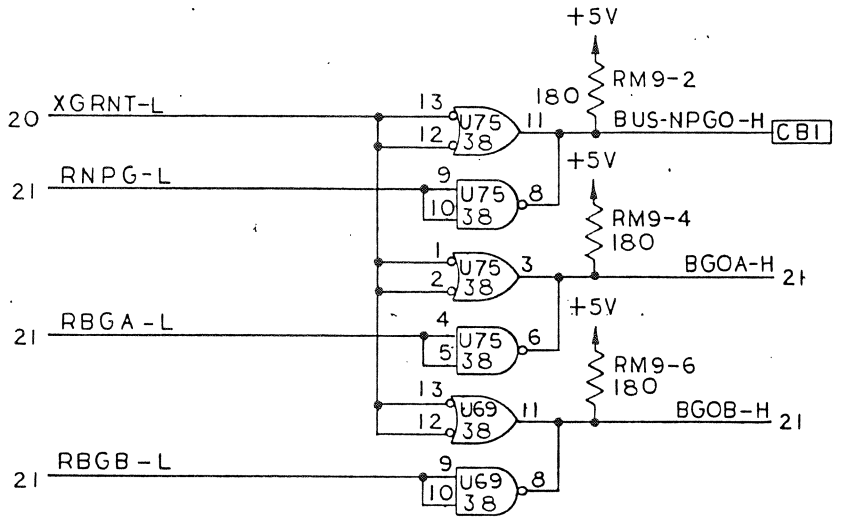

GRANT BUS DRIVERS

SCALE	SIZE	DRAWING NO.
	B	10103003
DO NOT SCALE DRAWING		SHEET 21 OF 40

THIS INFORMATION CONTAINED HEREON IS THE PROPERTY OF ABLE COMPUTER TECHNOLOGY INC. TRANSMITTAL, RECEIPT OR POSSESSION OF THIS INFORMATION DOES NOT EXPRESSEL LICENSE, OR RIGHT ANY RIGHTS TO USE, SELL, OR MANUFACTURE FROM THIS INFORMATION AND NO REPRODUCTION OR PUBLICATION OF IT IN WHOLE OR IN PART, SHALL BE MADE WITHOUT WRITTEN AUTHORIZATION FROM AN OFFICER OF THE ABOVE FIRM.

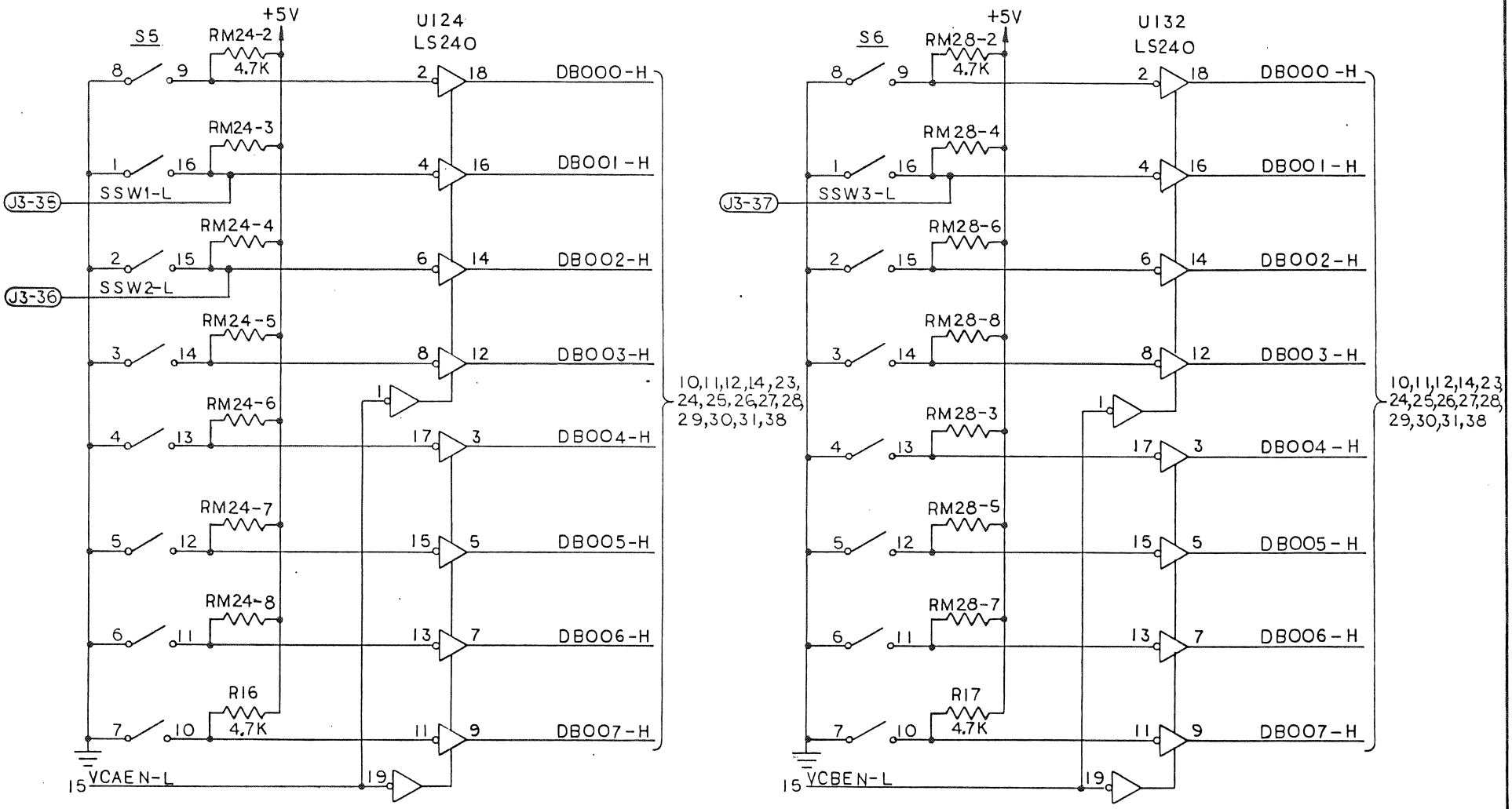

SCALE	SIZE	DRAWING NO.
	B	10103003
DO NOT SCALE DRAWING		SHEET 22 OF 40

BISHOP GRAPHICS/ACCUPRESS

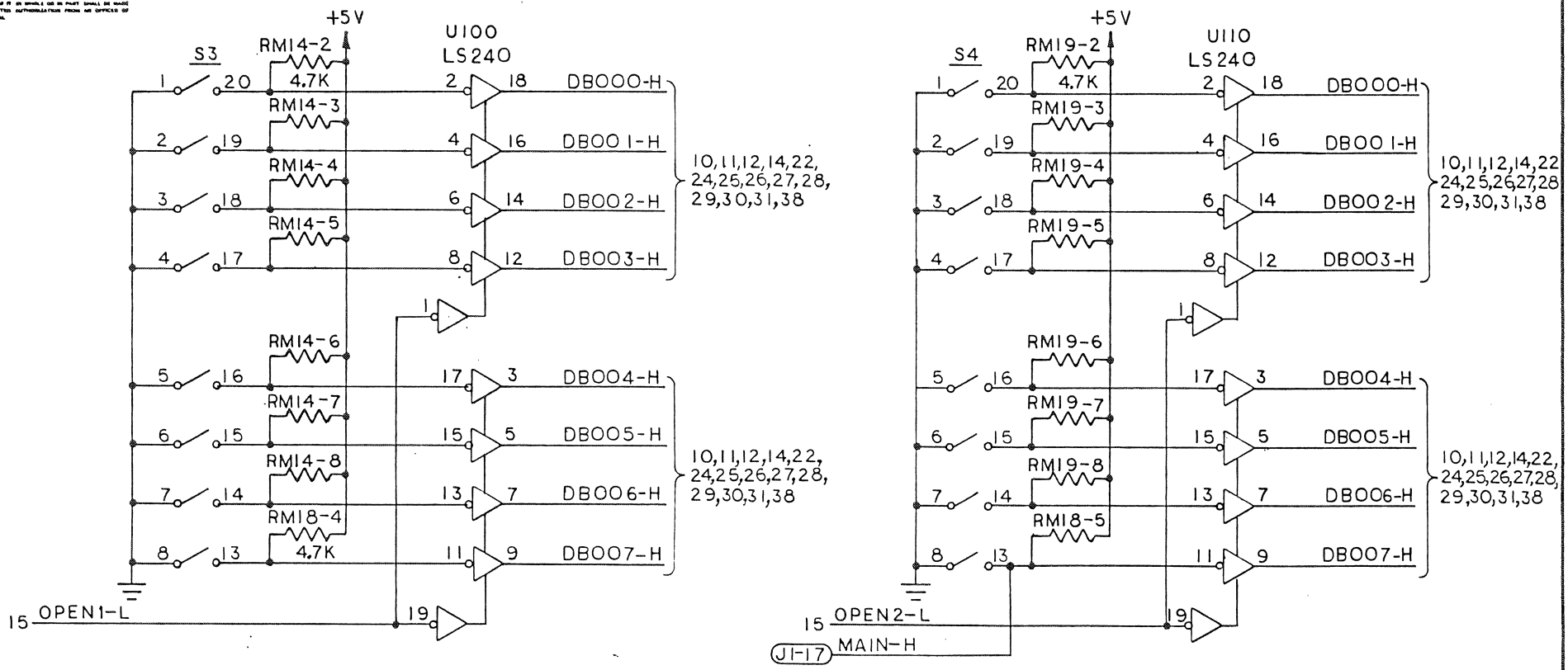

OPTION SWITCHES GROUP 1

OPTION SWITCHES - GROUP 2

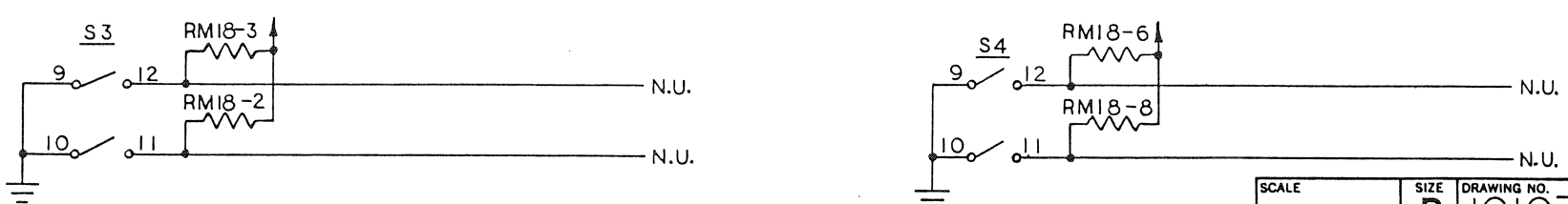

SCALE	SIZE	DRAWING NO.
	B	10103003
DO NOT SCALE DRAWING		SHEET 23 OF 40

THIS INFORMATION CONTAINED HEREON IS THE PROPERTY OF ABLE COMPUTER TECHNOLOGY INC. TRANSMITTAL, RECEIPT OR POSSESSION OF THIS INFORMATION DOES NOT EXPRESS, LICENSE, OR WAIVE ANY RIGHTS TO USE, SELL, OR MANUFACTURE FROM THIS INFORMATION AND NO REPRODUCTION OR PUBLICATION OF IT IN WHOLE OR IN PART, SHALL BE MADE WITHOUT WRITTEN AUTHORIZATION FROM AN OFFICER OF THE ABOVE FIRM.

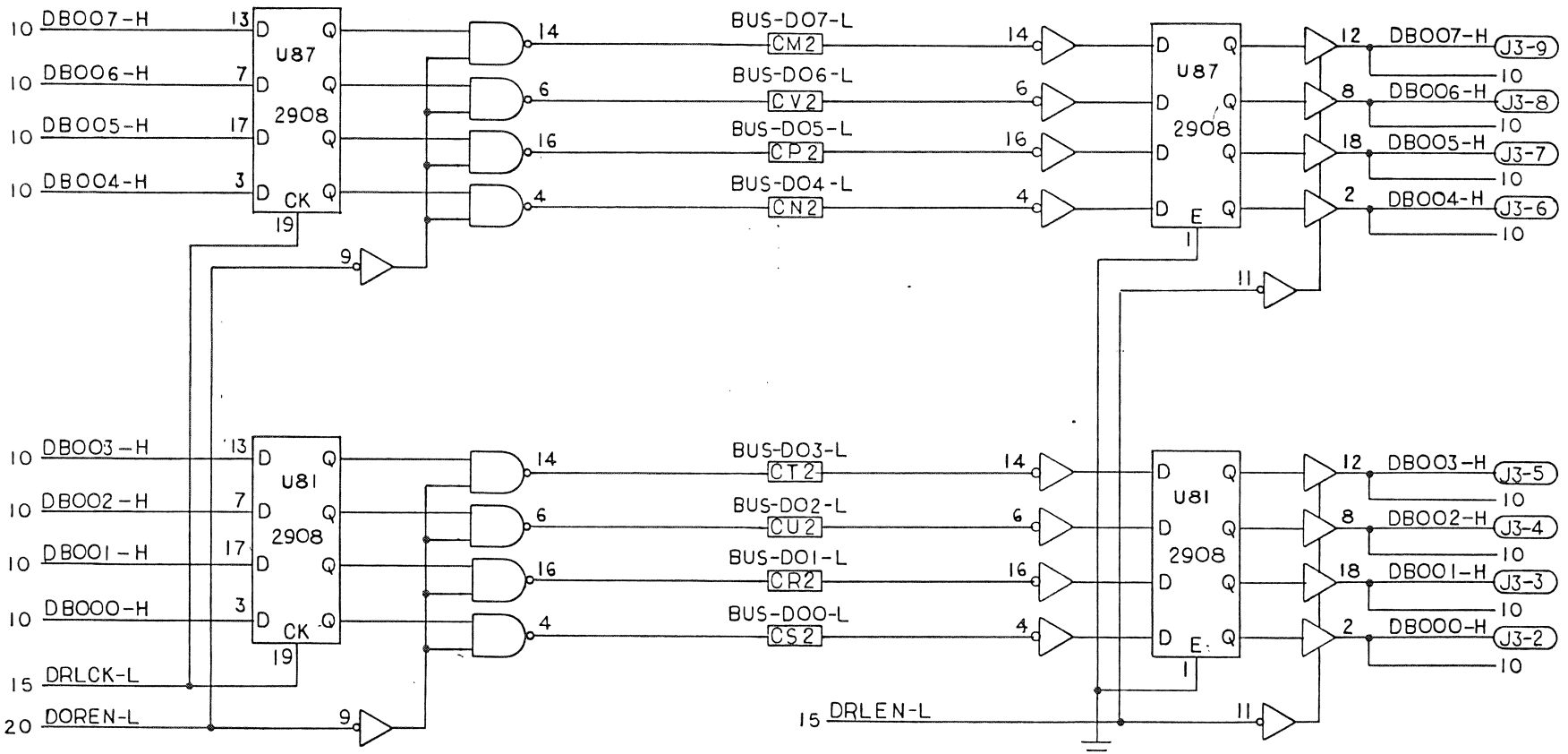

DATA OUTPUT REGISTER
LOW BYTE

DATA INPUT REGISTER
LOW BYTE

SCALE	SIZE	DRAWING NO.
	B	10103003
DO NOT SCALE DRAWING		SHEET 24 OF 40

BISHOP GRAPHICS/ACCUPRESS

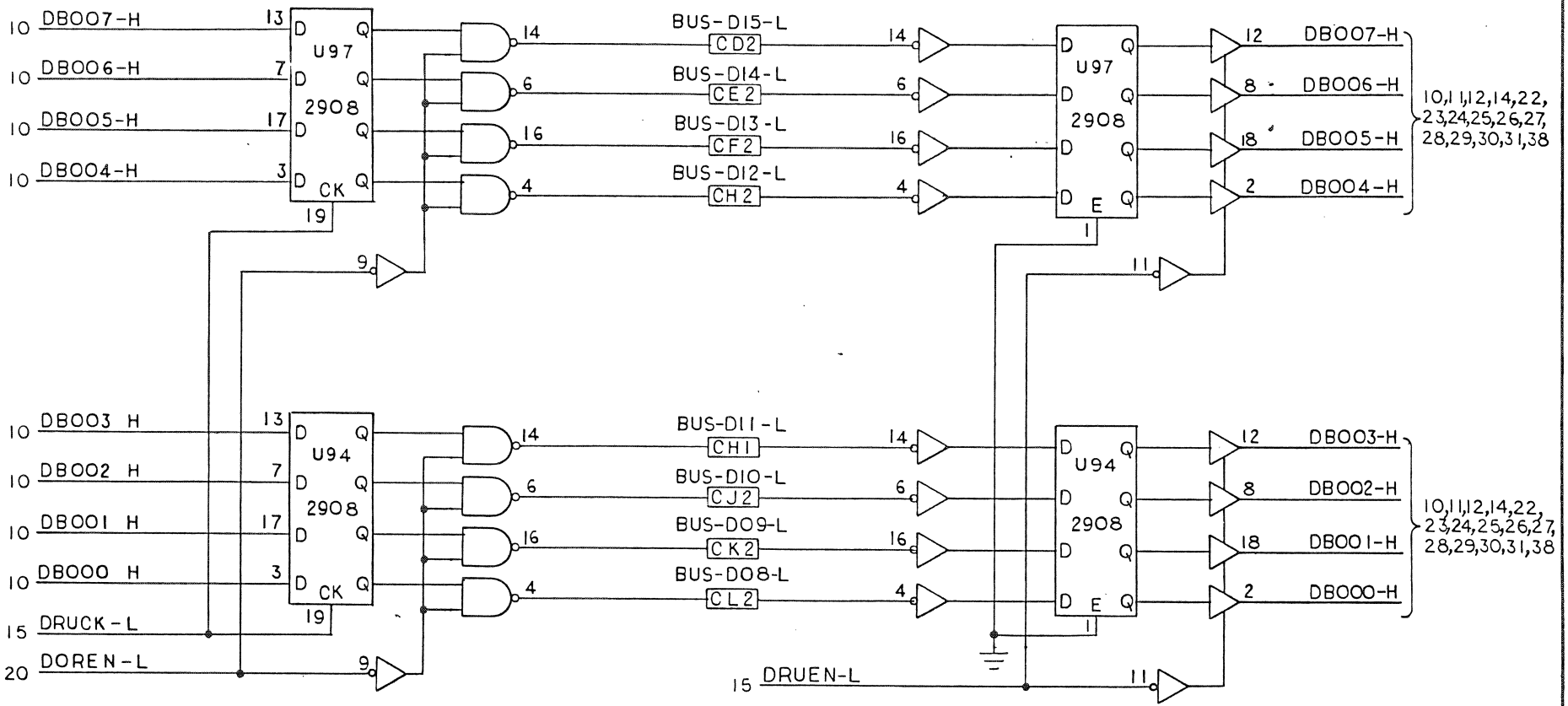

DATA OUTPUT REGISTER

HIGH BYTE

DATA INPUT REGISTER

HIGH BYTE

SCALE	SIZE	DRAWING NO.
	B	10103003
DO NOT SCALE DRAWING		SHEET 25 OF 40

THIS INFORMATION CONTAINED HEREON IS THE PROPERTY OF ABLE COMPUTER TECHNOLOGY INC. TRANSMITTAL, RECEIPT OR POSSESSION OF THIS INFORMATION DOES NOT CONFERS, LICENSE, OR IMPLY ANY RIGHTS TO USE, SELL, OR MANUFACTURE FROM THIS INFORMATION AND NO REPRODUCTION OR PUBLICATION OF IT, IN WHOLE OR IN PART, SHALL BE MADE WITHOUT WRITTEN AUTHORIZATION FROM AN OFFICER OF THE ABOVE FIRM.

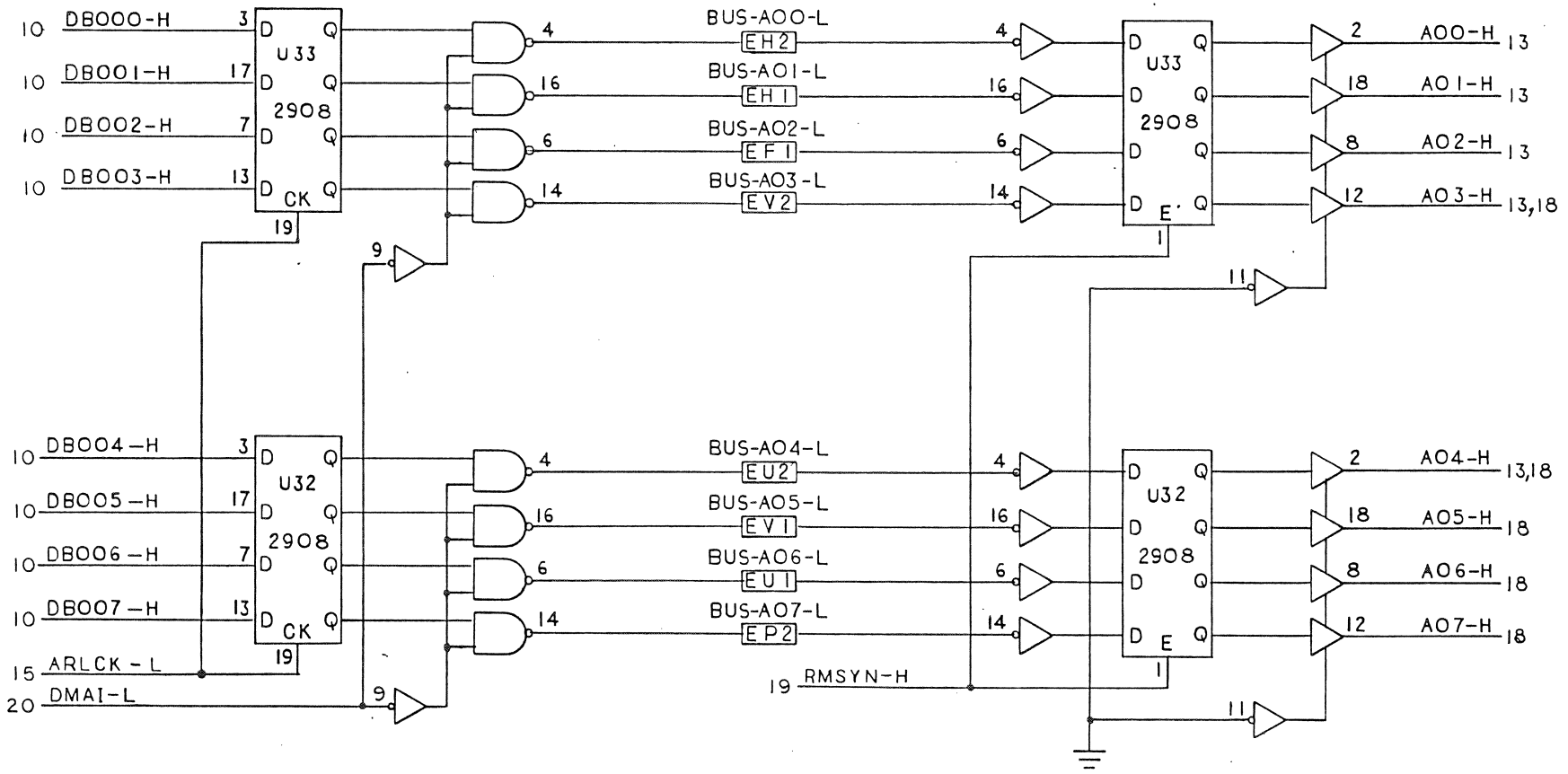

ADDRESS OUTPUT REGISTER

ADDRESS INPUT LATCH

SCALE	SIZE	DRAWING NO.
	B	10103003
DO NOT SCALE DRAWING		SHEET 26 OF 40

BISHOP GRAPHICS/ACCUPRESS

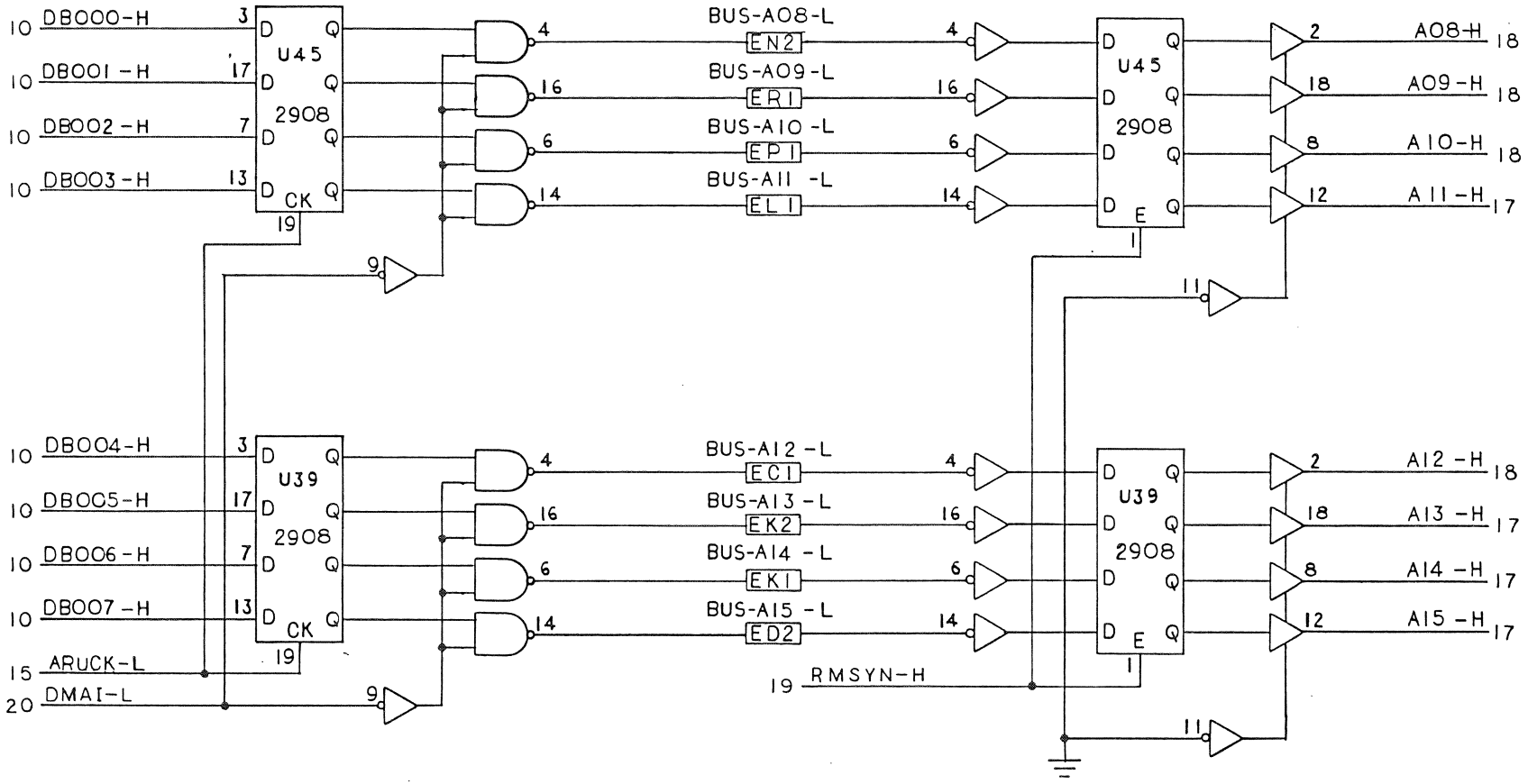

ADDRESS OUTPUT REGISTER

ADDRESS INPUT LATCH

SCALE	SIZE	DRAWING NO.
	B	10103003
DO NOT SCALE DRAWING		SHEET 27 OF 40

THIS INFORMATION (DRAWING) HEREIN IS THE PROPERTY OF ABLE COMPUTER TECHNOLOGY, INC. TRANSMITTAL, RECEIPT OR POSSESSION OF THIS INFORMATION DOES NOT EXPRESS, LICENSE, OR IMPLY ANY RIGHTS TO USE, SELL, OR MANUFACTURE FROM THIS INFORMATION AND NO REPRODUCTION OR PUBLICATION OF IT, OR WHOLE OR IN PART SHALL BE MADE WITHOUT WRITTEN AUTHORIZATION FROM AN OFFICER OF THE ABOVE FIRM.

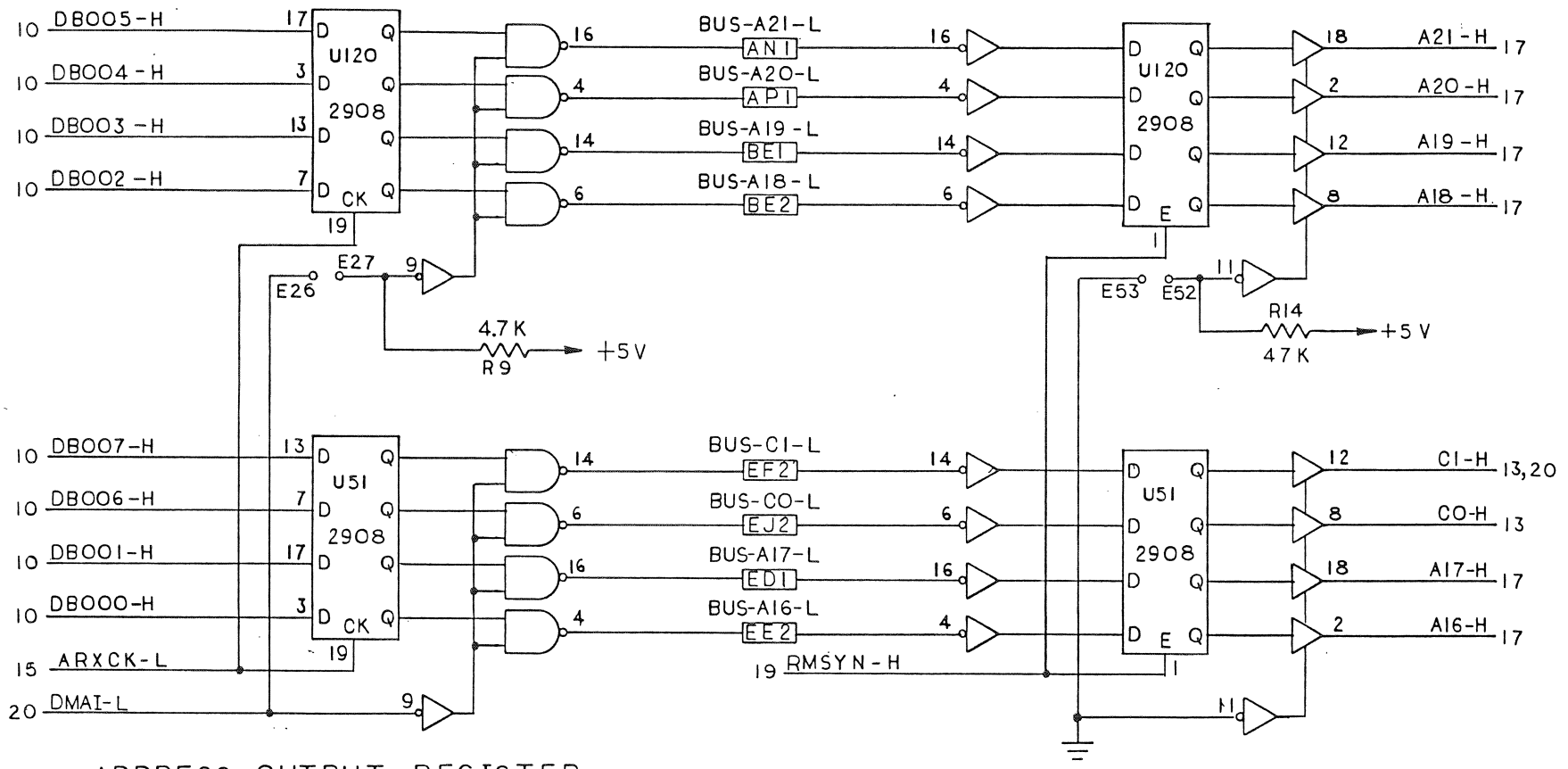

ADDRESS OUTPUT REGISTER

ADDRESS INPUT LATCH

SCALE	SIZE	DRAWING NO.
	B	10103003
DO NOT SCALE DRAWING		SHEET 28 OF 40

BISHOP GRAPHICS/ACCUPRESS

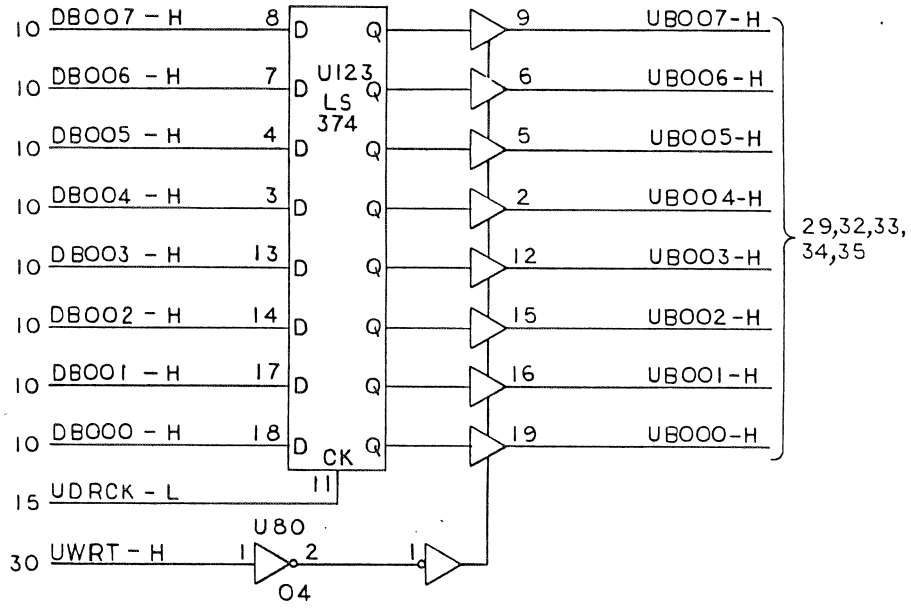

UART OUTPUT DATA REGISTER

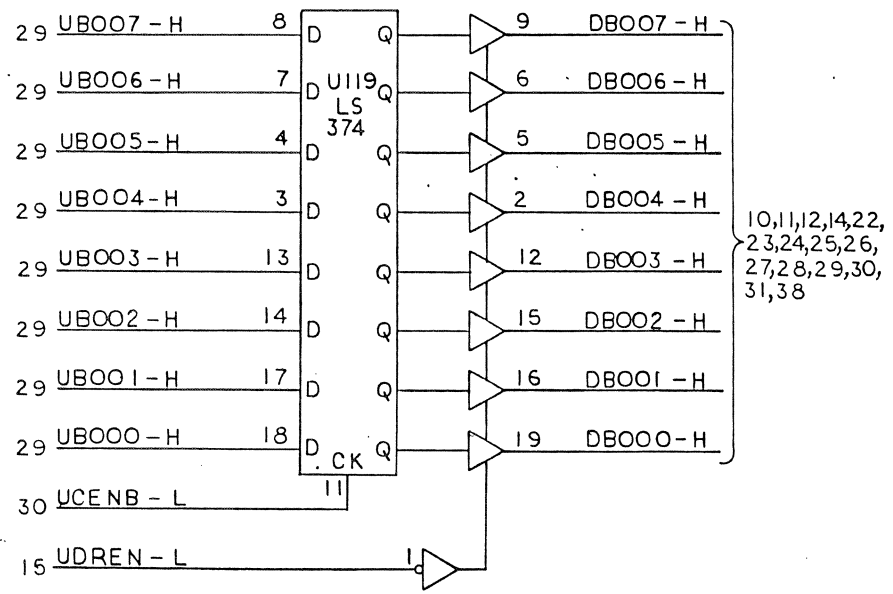

UART INPUT DATA REGISTER

SCALE	SIZE	DRAWING NO.
	B	10103003
DO NOT SCALE DRAWING		SHEET 29 OF 40

THIS INFORMATION CONTAINED HEREIN IS THE PROPERTY OF ABLE COMPUTER TECHNOLOGY INC. TRANSMITTAL, RECEIPT OR POSSESSION OF THE INFORMATION DOES NOT EXPRESS, LICENSE, OR IMPLY ANY RIGHTS TO USE, SELL, OR MANUFACTURE FROM THIS INFORMATION AND NO REPRODUCTION OR PUBLICATION OF IT, IN WHOLE OR IN PART, SHALL BE MADE WITHOUT WRITTEN AUTHORIZATION FROM AN OFFICER OF THE ABOVE FIRM.

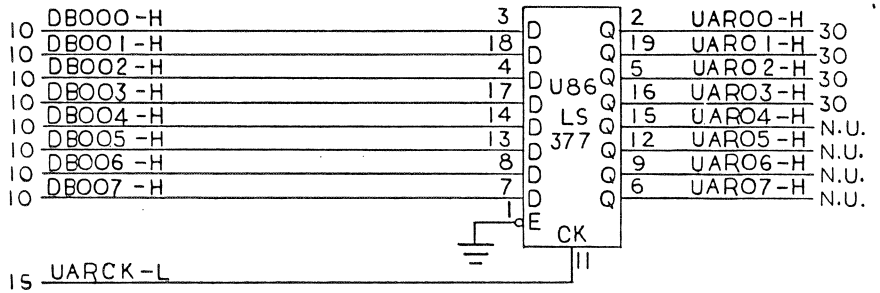

UART ADDRESS REGISTER

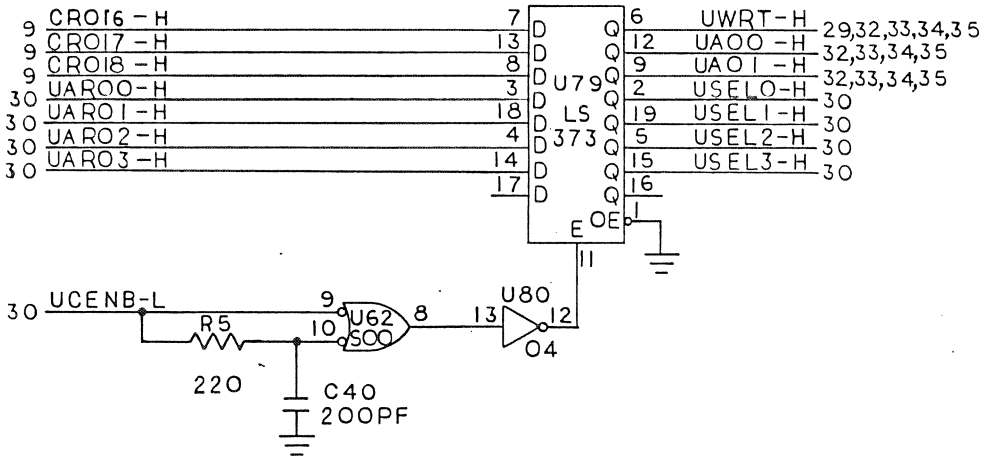

UART COMMAND DECODE

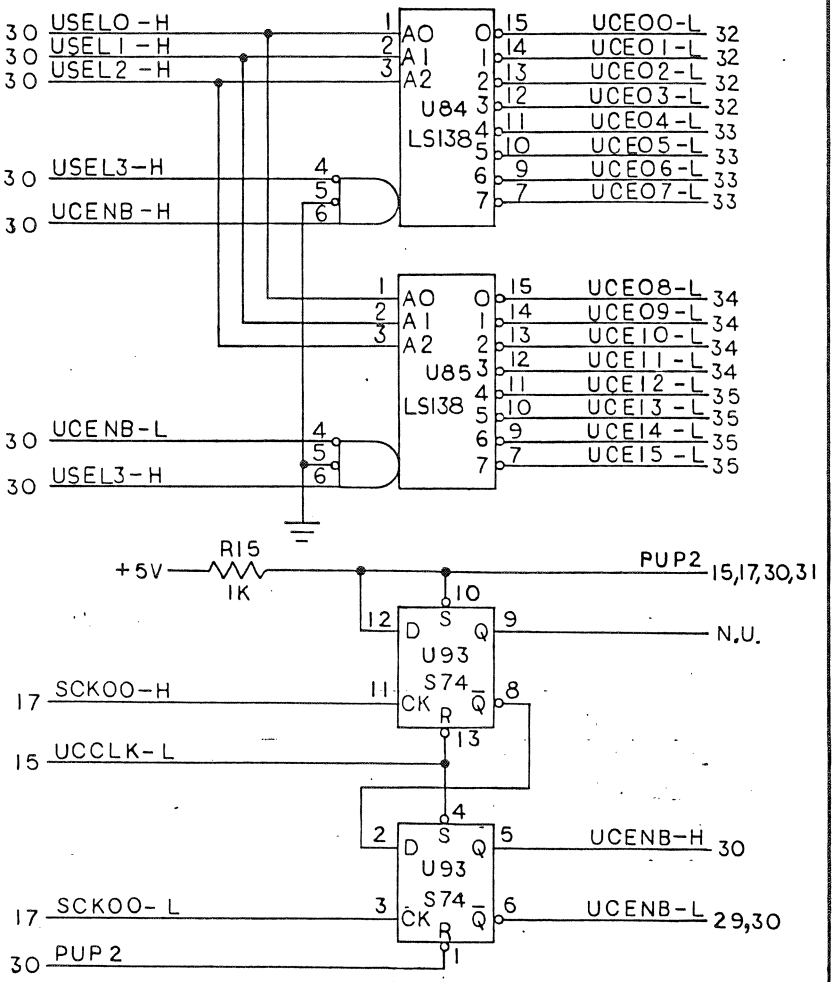

UART CHIP ENABLES

SCALE	SIZE	DRAWING NO.
	B	10103003
DO NOT SCALE DRAWING		SHEET 30OF 40

BISHOP GRAPHICS/ACCUPRESS

THE INFORMATION CONTAINED HEREON IS THE PROPERTY OF ABLE COMPUTER TECHNOLOGY INC. TRANSMITTAL, RECEIPT OR POSSESSION OF THE INFORMATION DOES NOT EXPRESS, LICENSE, OR IMPLY ANY RIGHTS TO USE, SELL, OR MANUFACTURE FROM THIS INFORMATION AND HAS NO REPRODUCTION OR PUBLICATION OF IT, IN WHOLE OR IN PART, SHALL BE MADE WITHOUT WRITTEN AUTHORIZATION FROM AN OFFICER OF THE ABOVE FIRM.

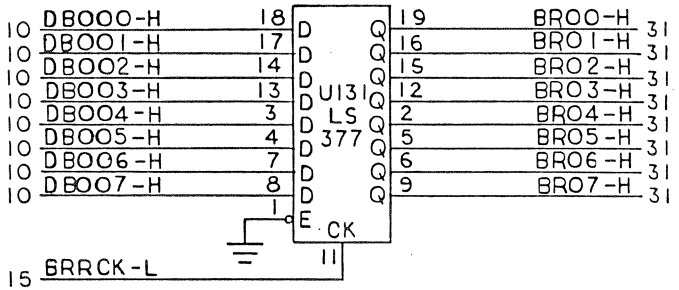

EXT. BAUD RATE REGISTER

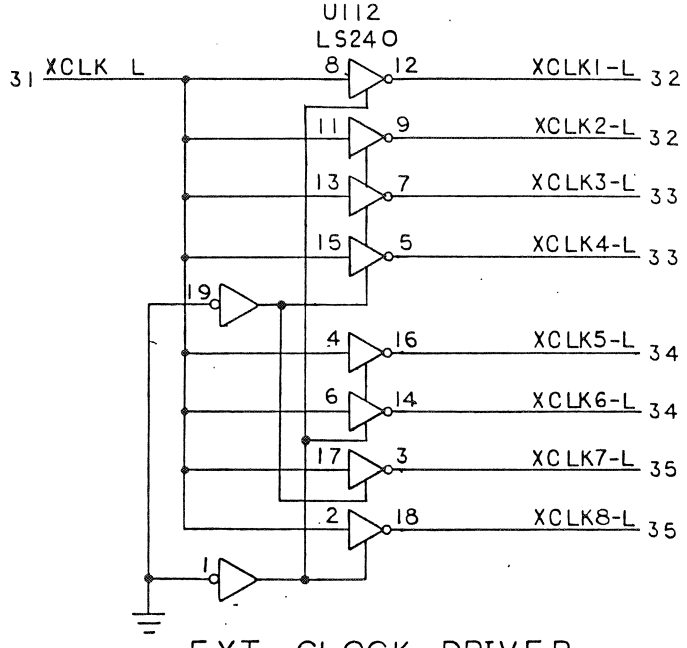

EXT. CLOCK DRIVER

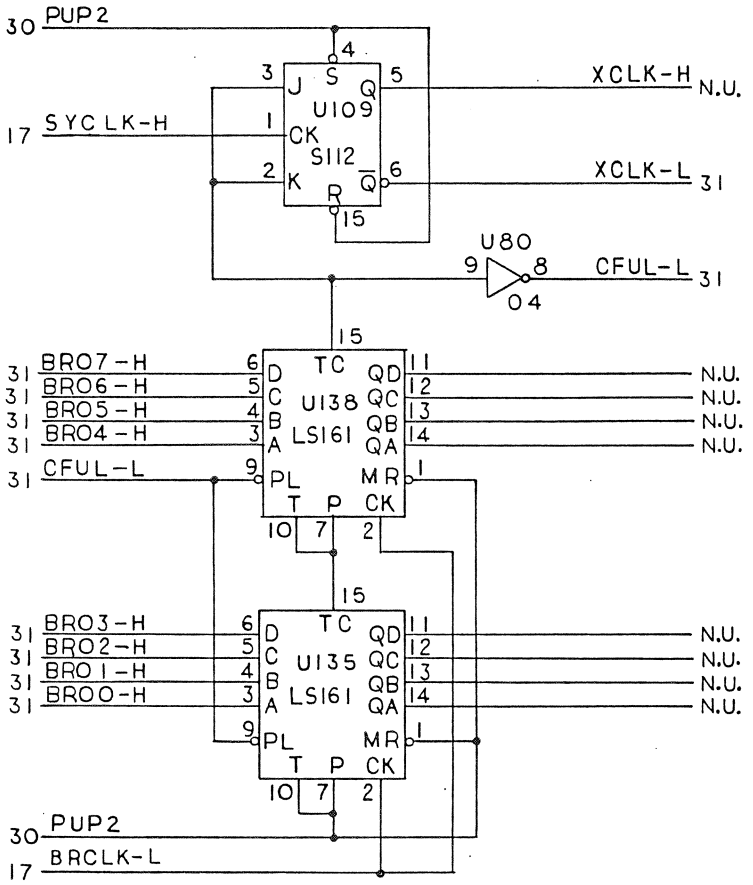

UART EXT. CLOCK GENERATOR

SCALE	SIZE	DRAWING NO.
	B	10103003
DO NOT SCALE DRAWING		SHEET 31 OF 40

BISHOP GRAPHICS/ACCUPRESS

THE INFORMATION CONTAINED HEREIN IS THE PROPERTY OF ABLE COMPUTER TECHNOLOGY, INC. TRANSMITTAL, RECEIPT OR POSSESSION OF THE INFORMATION DOES NOT EXPRESS, LICENSE, OR IMPLY ANY RIGHTS TO USE, SELL, OR MANUFACTURE FROM THIS INFORMATION AND NO REPRODUCTION OR PUBLICATION OF IT, IN WHOLE OR IN PART, SHALL BE MADE WITHOUT WRITTEN AUTHORIZATION FROM AN OFFICER OF THE ABOVE FIRM.

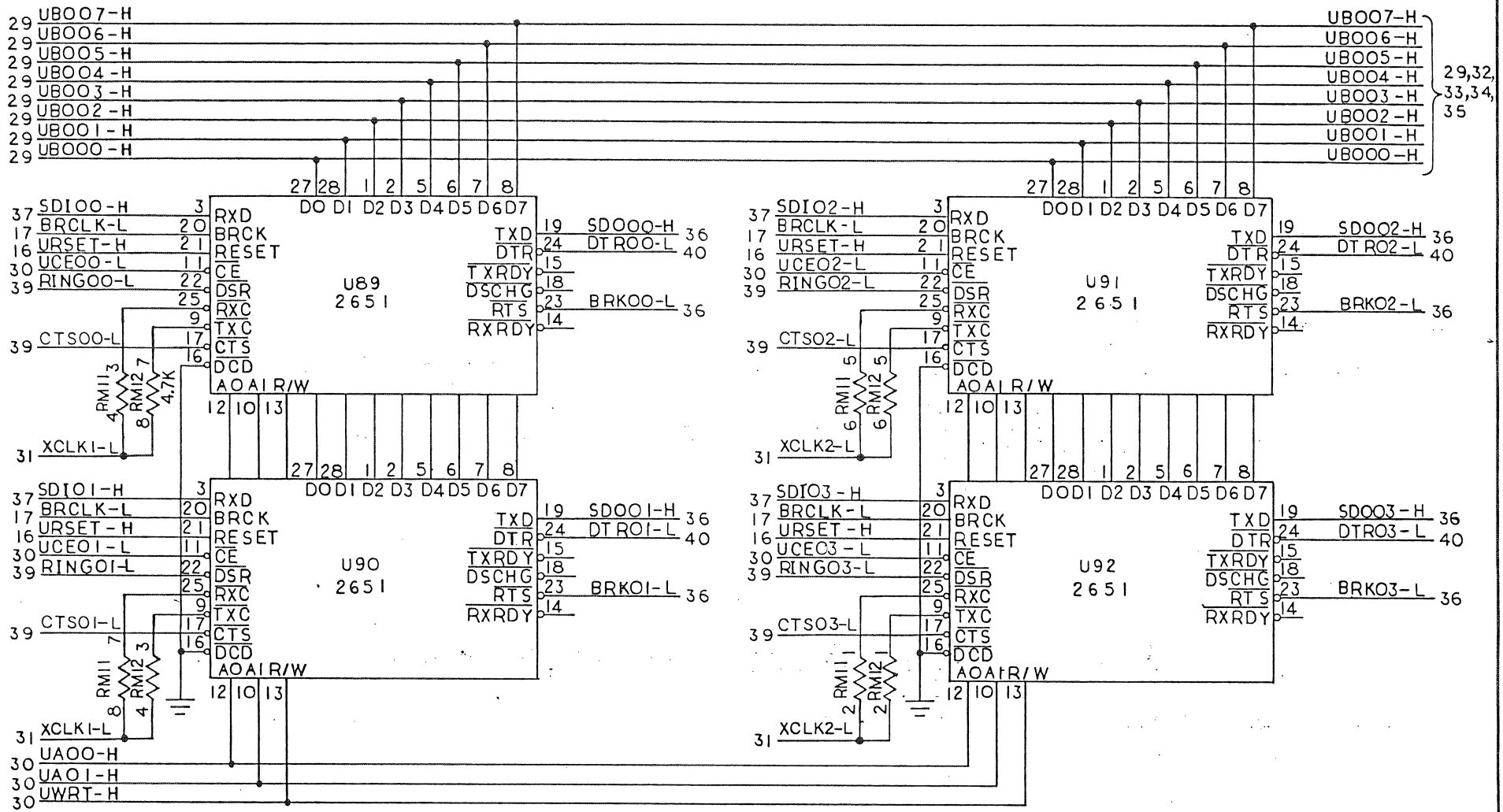

UART CH0 AND CH1

UART CH2 AND CH3

SCALE	SIZE	DRAWING NO.
	B	10103003
DO NOT SCALE DRAWING		SHEET 32 OF 40

BISHOP GRAPHICS/ACCUPRESS

THE INFORMATION CONTAINED HEREIN IS THE PROPERTY OF ABLE COMPUTER TECHNOLOGY, INC. TRANSMITTAL, RECEIPT OR POSSESSION OF THE INFORMATION DOES NOT EXPRESS, LICENSE, OR IMPLY ANY RIGHTS TO USE, SELL, OR MANUFACTURE FROM THIS INFORMATION AND NO REPRODUCTION OR PUBLICATION OF IT, IN WHOLE OR IN PART, SHALL BE MADE WITHOUT WRITTEN AUTHORIZATION FROM AN OFFICER OF THE ABOVE FIRM.

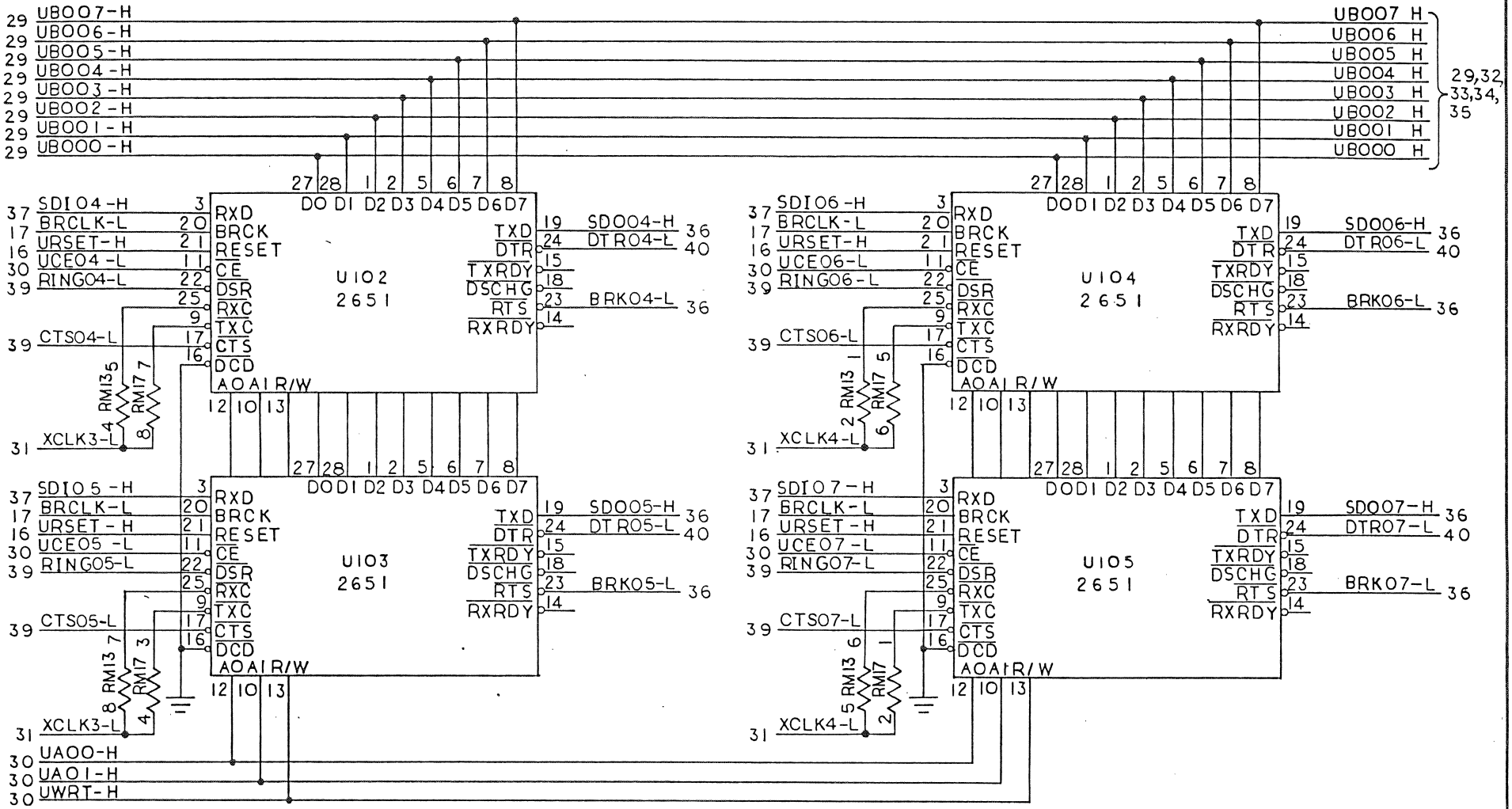

UART CH4 AND CH5

UART CH6 AND CH7

SCALE	SIZE	DRAWING NO.
	B	10103003
DO NOT SCALE DRAWING		SHEET 33 OF 40

BISHOP GRAPHICS/ACCUPRESS

THIS INFORMATION CONTAINED HEREIN IS THE PROPERTY OF ABLE COMPUTER TECHNOLOGY INC. TRANSMITTAL, RECEIPT OR POSSESSION OF THE INFORMATION DOES NOT EXPRESS, LICENSE, OR IMPLY ANY RIGHTS TO USE, SELL, OR MANUFACTURE FROM THIS INFORMATION AND NO REPRODUCTION OR PUBLICATION OF IT, IN WHOLE OR IN PART, SHALL BE MADE WITHOUT WRITTEN AUTHORIZATION FROM AN OFFICER OF THE ABOVE FIRM.

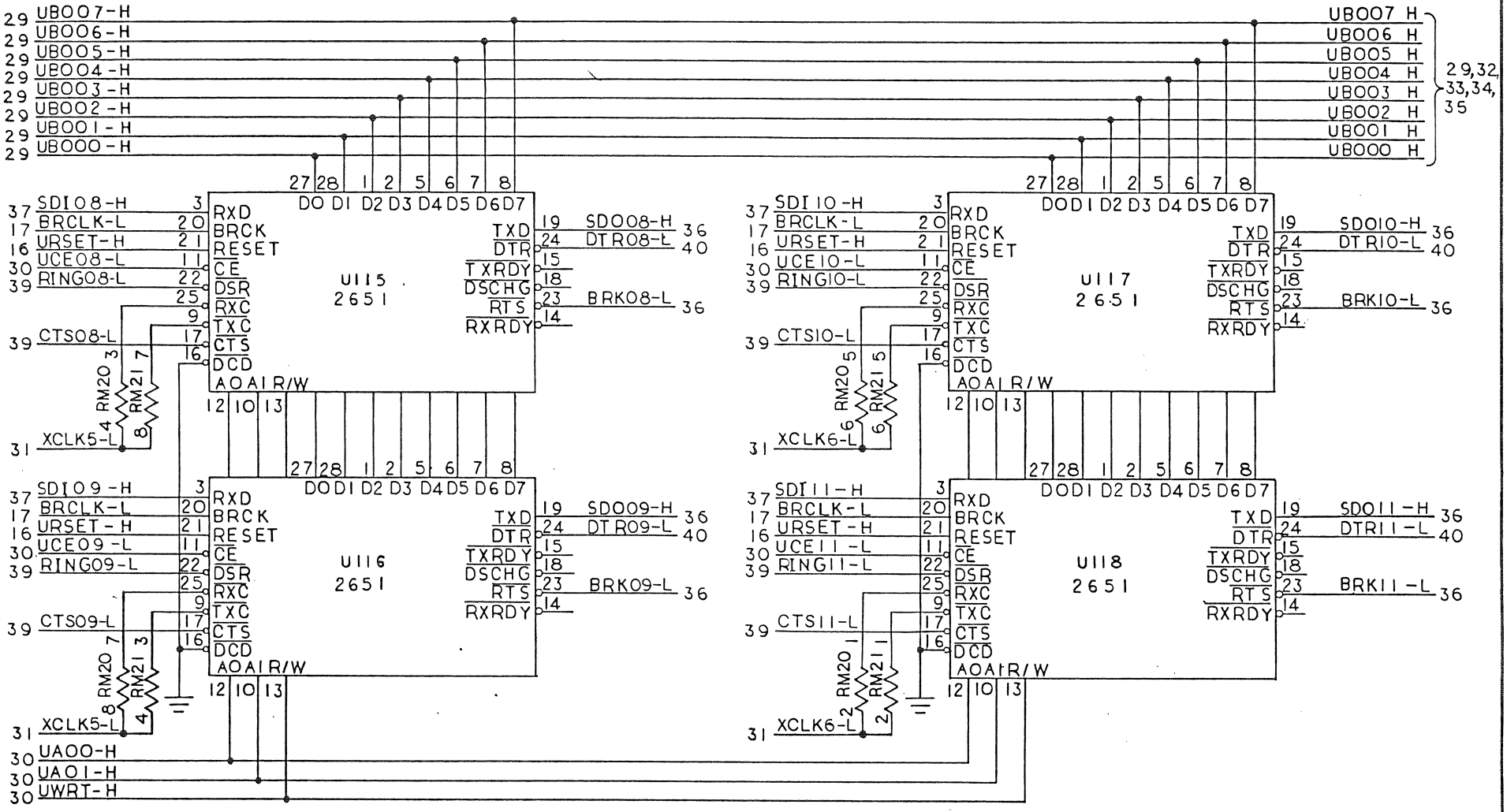

UART CH8 AND CH9

UART C10 AND CH11

SCALE	SIZE	DRAWING NO.
	B	10103003
DO NOT SCALE DRAWING		SHEET 34 OF 40

BISHOP GRAPHICS/ACCUPRESS

THE INFORMATION CONTAINED HEREON IS THE PROPERTY OF ABLE COMPUTER TECHNOLOGY INC. TRANSMITTAL, DISCLOSURE OR REPRODUCTION OF THE INFORMATION DOES NOT EXPRESS, LICENSE, OR IMPLY ANY RIGHTS TO USE, SELL OR MANUFACTURE FROM THIS INFORMATION AND NO REPRODUCTION OR PUBLICATION OF IT, IN WHOLE OR IN PART, SHALL BE MADE WITHOUT WRITTEN AUTHORIZATION FROM AN OFFICER OF THE ABOVE FIRM.

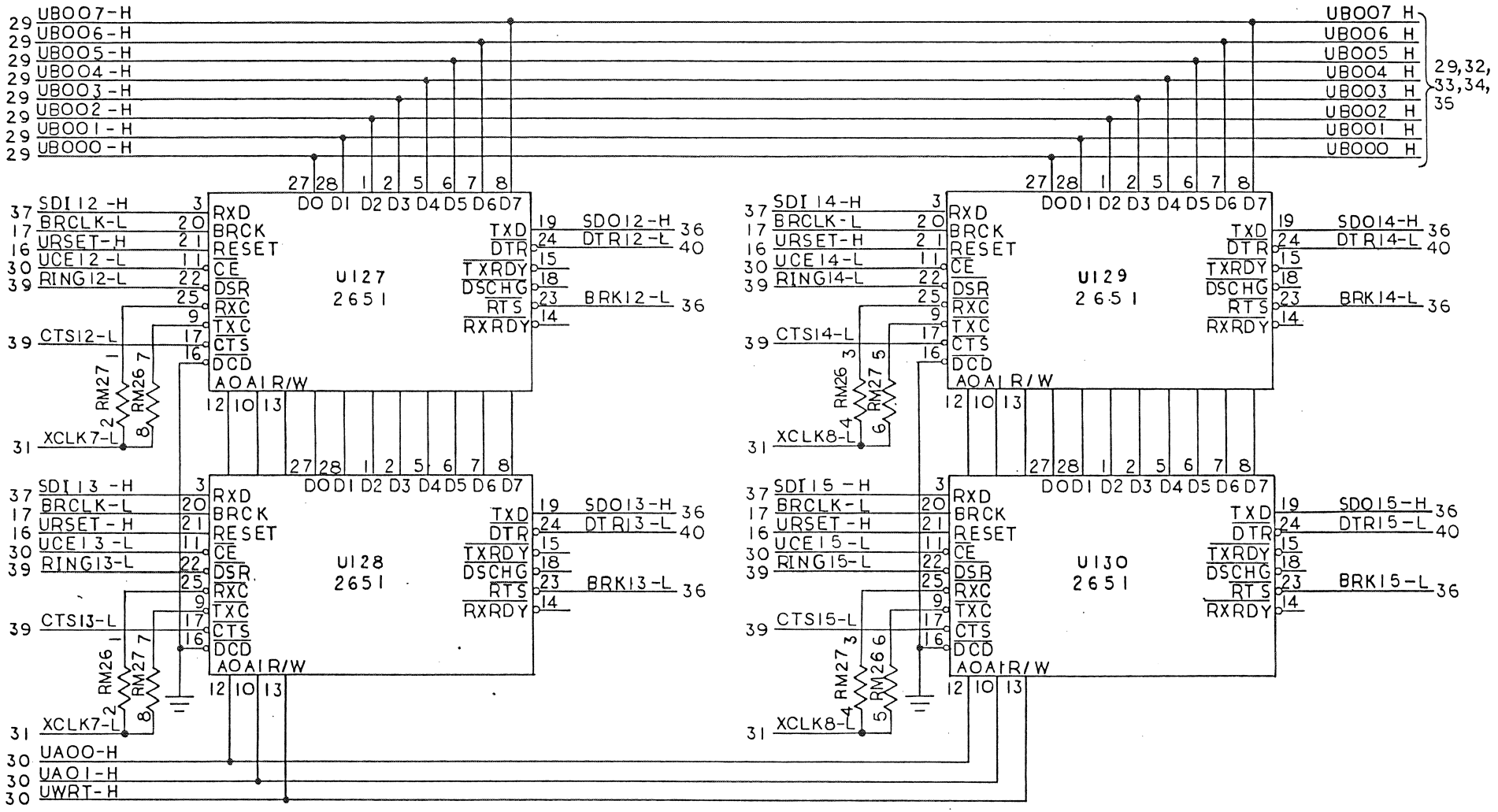

UART CH12 AND CH13

UART CH14 AND CH15

SCALE	SIZE	DRAWING NO.
	B	10103003
DO NOT SCALE DRAWING		SHEET 35 OF 40

BISHOP GRAPHICS/ACCUPRESS

THIS INFORMATION CONTAINED HEREON IS THE PROPERTY OF ABLE COMPUTER TECHNOLOGY, INC. TRANSMITTAL, RECEIPT OR POSSESSION OF THIS INFORMATION DOES NOT EXPRESS, LICENSE, OR IMPLY ANY RIGHTS TO USE, SELL, OR MANUFACTURE FROM THIS INFORMATION AND NO REPRODUCTION OR PUBLICATION OF IT, IN WHOLE OR IN PART, SHALL BE MADE WITHOUT WRITTEN AUTHORIZATION FROM AN OFFICER OF THE ABOVE FIRM.

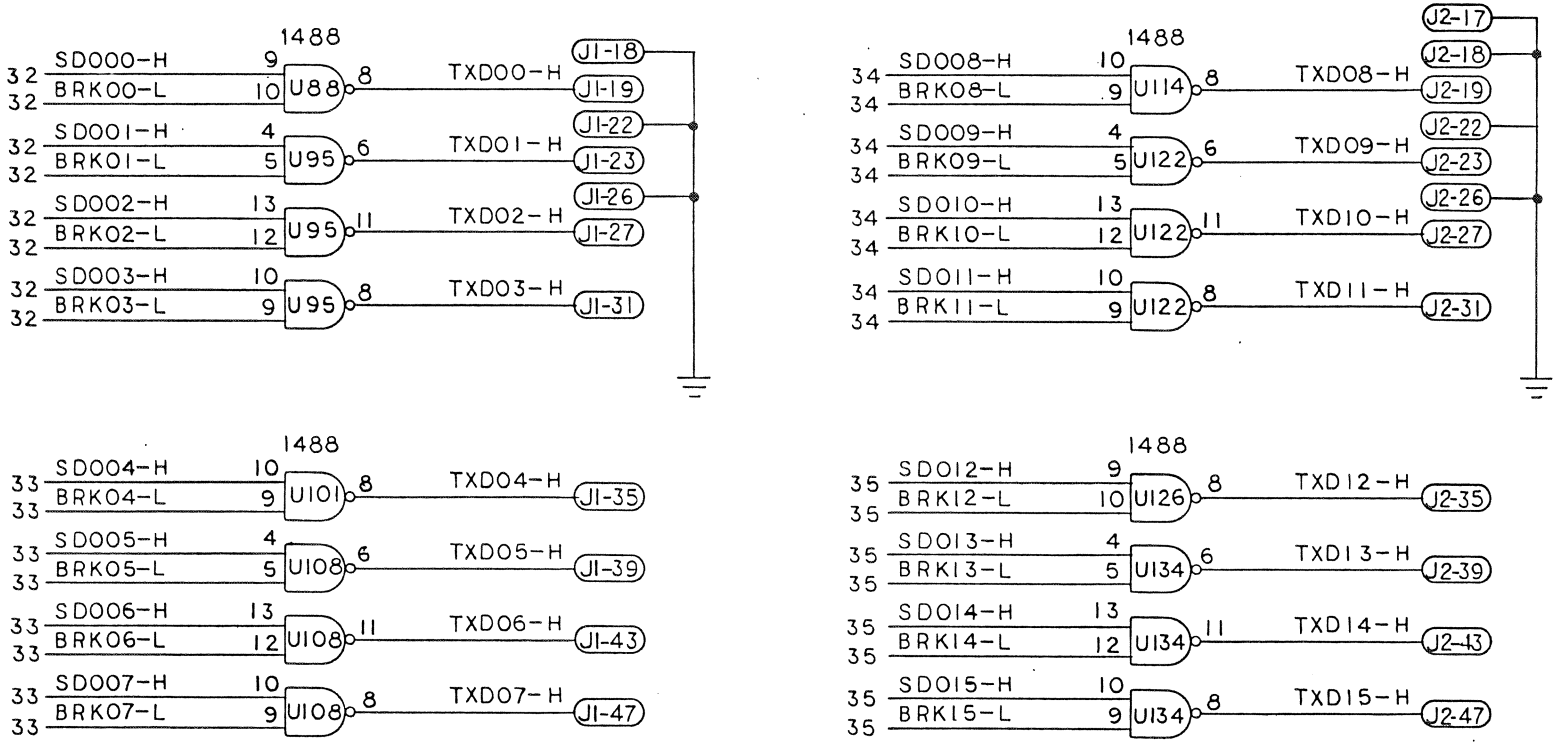

EIA TRANSMIT DATA CH0–CH15

SCALE	SIZE	DRAWING NO.
	B	10103003
DO NOT SCALE DRAWING		SHEET 36 OF 40

THE INFORMATION CONTAINED HEREIN IS THE PROPERTY OF ABLE COMPUTER TECHNOLOGY INC. TRANSMITTAL, RECEIPT OR POSSESSION OF THE INFORMATION DOES NOT EXPRESS, LICENSE, OR IMPLY ANY RIGHTS TO USE, SELL, OR MANUFACTURE FROM THIS INFORMATION AND NO REPRODUCTION OR PUBLICATION OF IT, IN WHOLE OR IN PART, SHALL BE MADE WITHOUT WRITTEN AUTHORIZATION FROM AN OFFICER OF THE ABOVE FIRM.

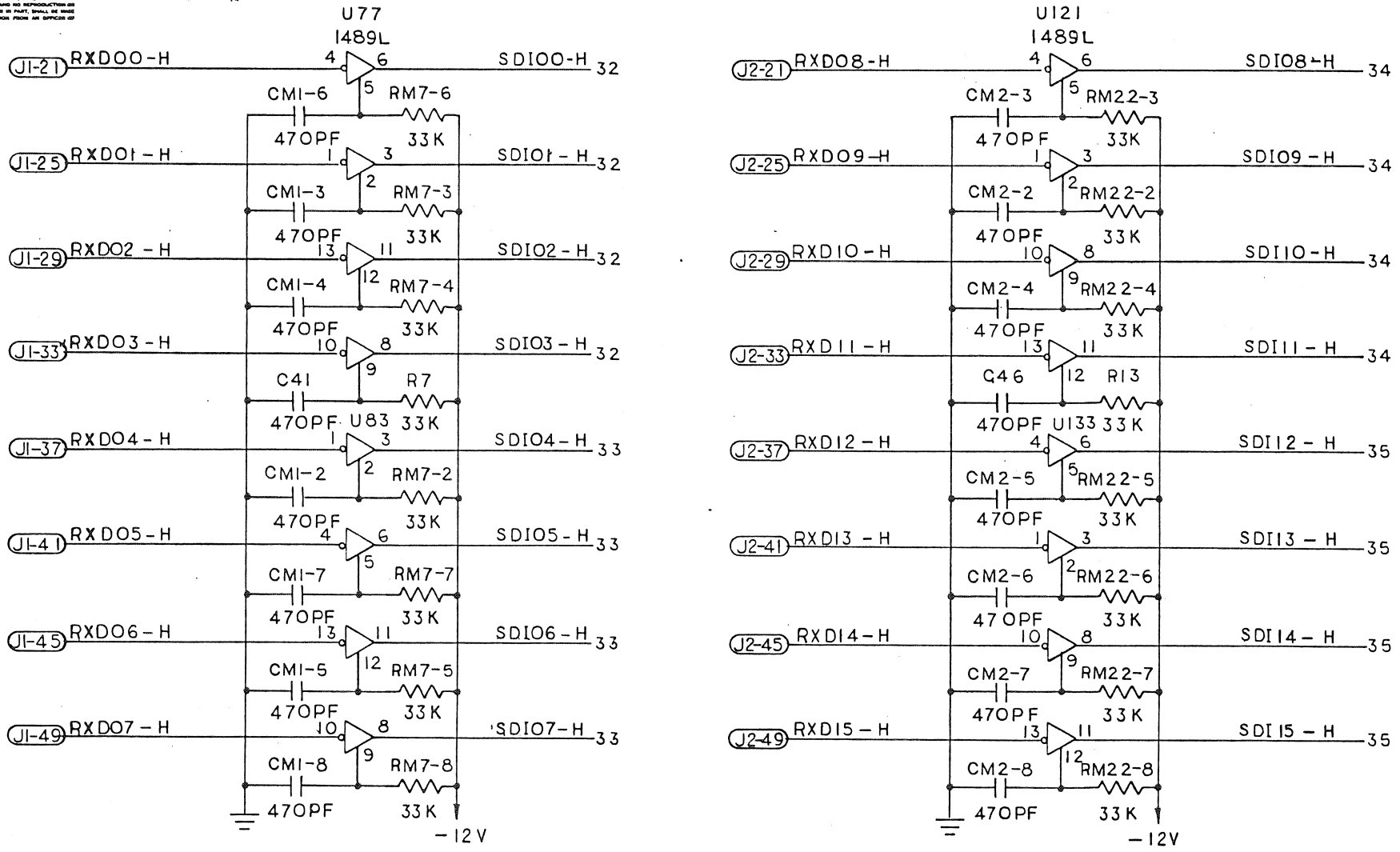

SCALE	SIZE	DRAWING NO.
	B	10103003
DO NOT SCALE DRAWING		SHEET 37 OF 40

BISHOP GRAPHICS/ACCUPRESS

THE INFORMATION CONTAINED HEREON IS THE PROPERTY OF ABLE COMPUTER TECHNOLOGY INC. TRANSMITTAL, RECEIPT OR POSSESSION OF THE INFORMATION DOES NOT EXPRESS, LICENSE, OR IMPLY ANY RIGHTS TO USE, SELL, OR MANUFACTURE FROM THIS INFORMATION AND NO REPRODUCTION OR PUBLICATION OF IT, IN WHOLE OR IN PART, SHALL BE MADE WITHOUT WRITTEN AUTHORIZATION FROM AN OFFICER OF THE ABOVE FIRM.

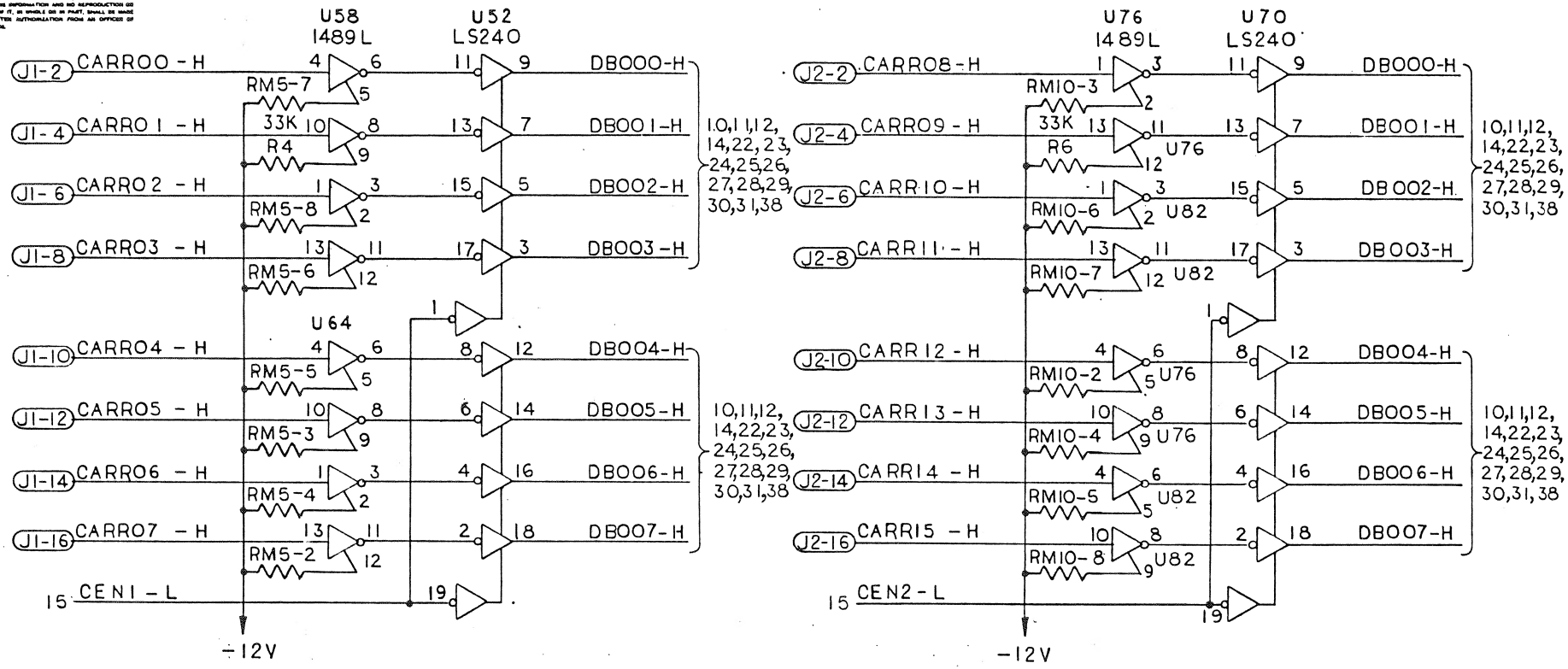

CARRIER EIA RECEIVERS AND BUFFERS

SCALE	SIZE	DRAWING NO.
	B	10103003
DO NOT SCALE DRAWING		SHEET 38 OF 40

BISHOP GRAPHICS/ACCUPRESS

THE INFORMATION CONTAINED HEREON IS THE PROPERTY OF ABLE COMPUTER TECHNOLOGY, INC. TRANSMITTAL, RECEIPT OR POSSESSION OF THE INFORMATION DOES NOT EXPRESS, LICENSE, OR IMPLY ANY RIGHTS TO USE, SELL, OR MANUFACTURE FROM THIS INFORMATION AND NO REPRODUCTION OR PUBLICATION OF IT, IN WHOLE OR IN PART, SHALL BE MADE WITHOUT WRITTEN AUTHORIZATION FROM AN OFFICER OF THE ABOVE FIRM.

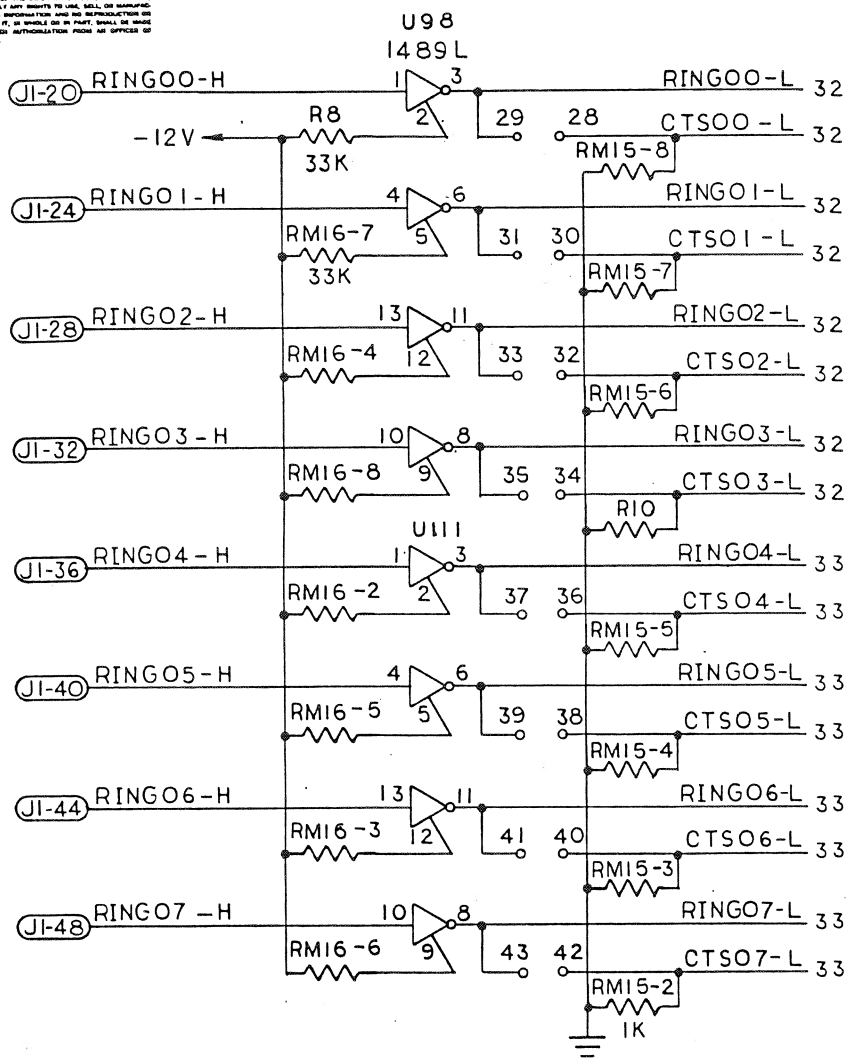

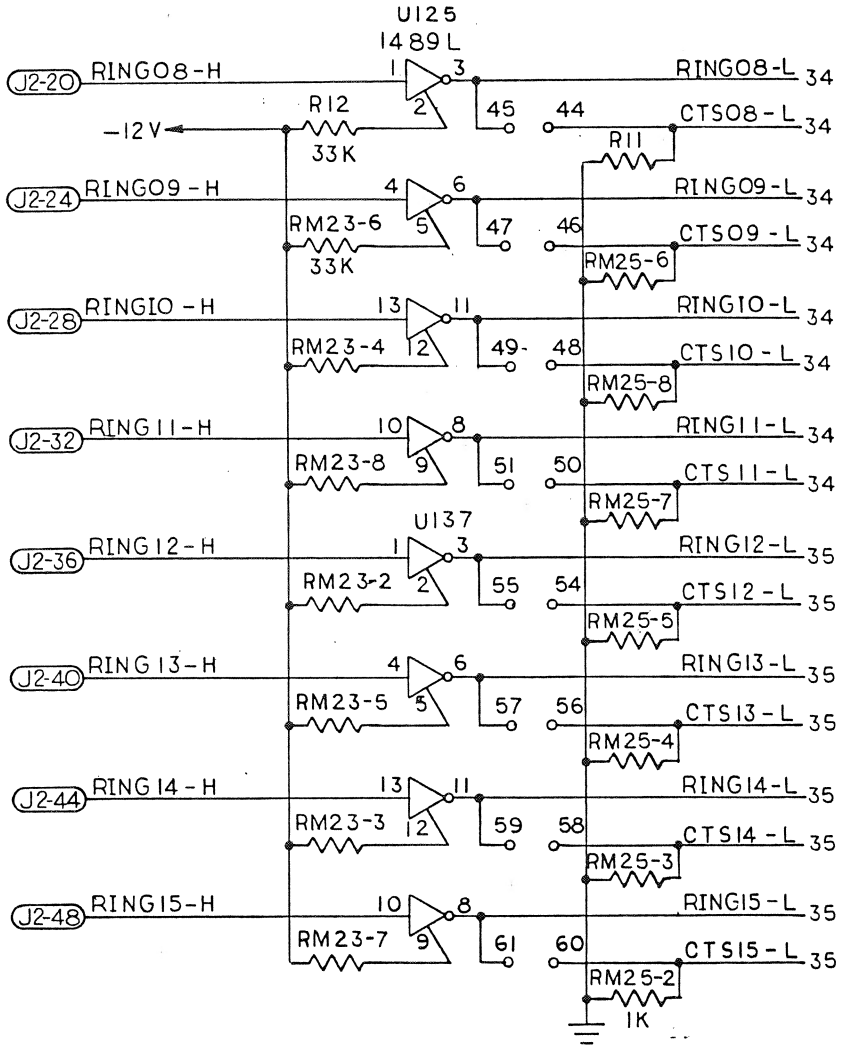

RING EIA RECEIVERS

SCALE	SIZE	DRAWING NO.
	B	10103003
DO NOT SCALE DRAWING		SHEET 39 OF 40

BISHOP GRAPHICS/ACCUPRESS

THE INFORMATION CONTAINED HEREIN IS THE PROPERTY OF ABLE COMPUTER TECHNOLOGY INC. TRANSMITTAL, RECEIPT OR POSSESSION OF THIS INFORMATION DOES NOT EXPRESS, LICENSE, OR IMPLY ANY RIGHTS TO USE, SELL, OR MANUFACTURE FROM THIS INFORMATION AND NO REPRODUCTION OR PUBLICATION OF IT, IN WHOLE OR IN PART, SHALL BE MADE WITHOUT WRITTEN AUTHORIZATION FROM AN OFFICER OF THE ABOVE FIRM.

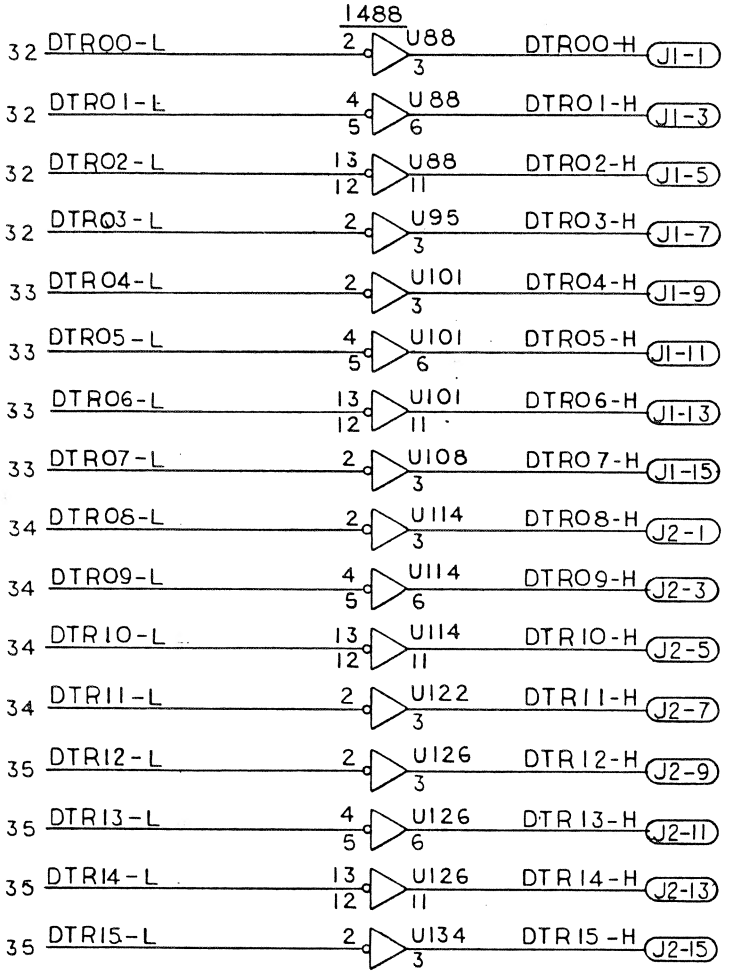

DATA TERMINAL READY

SCALE	SIZE	DRAWING NO.
	B	10103003
DO NOT SCALE DRAWING		SHEET 40 OF 40

BISHOP GRAPHICS/ACCUPRESS